ASI DOORS

Single Impactable Sliding Cooler/ Freezer Door
MODEL IXP 2600

PART'S MANUAL

Instructions for Ordering

This parts manual is intended to assist in the correct identification of the more commonly replaced parts; covering, generally, all models and styles offered within the marathon pharm. Line. The manual will also help identify obsolete parts, part design changes and current production parts. For more specific parts information, please contact an authorized representative or consult the factory's customer service or engineering departments. Asi doors reserves the right to discontinue any part and make design changes without notice.

General Instructions for Ordering Door Parts

Accurate information is always necessary to serve you correctly and promptly. Several steps should be followed to determine exactly the parts that are needed.

Refer to the information tag on your door and record the:

1. Door model number
2. Job number
3. Door number
4. Manufacturing date.

Use part numbers referenced in this manual.

If the item is not found in the manual, the product code on the back of the item is helpful.

If your door has no information label, the approximate purchase date is helpful.

Call

1-800-558-7068

or visit

asidoors.com/parts

to order parts

Manual Part #: 17A249

Door Identification

Determining the Job Number, Model and Year of Manufacture of your door is necessary to provide quick and accurate parts identification. The following is a description of labels and their locations.

When ordering parts, specify Job Number, Door Number and Manufacture Date

Product Labels:

Manual Doors

ASI Doors, Inc.

MILWAUKEE WISCONSIN MADE IN USA

DOOR MODEL | JOB NUMBER | DOOR NUMBER

MFG. DATE | INSPECTED BY

Figure 52: ID Label - Manual Door

Power Doors

ASI Doors, Inc.

MILWAUKEE WISCONSIN MADE IN USA

DOOR MODEL | JOB NUMBER | DOOR NUMBER

MFG. DATE | INSPECTED BY

OPERATOR TYPE | MODEL # | WIRING DIAGRAM

HORSEPOWER | VOLTAGE/PHASE | HZ | AMPERAGE

Figure 53: ID Label - Power Door

ID Tag Location

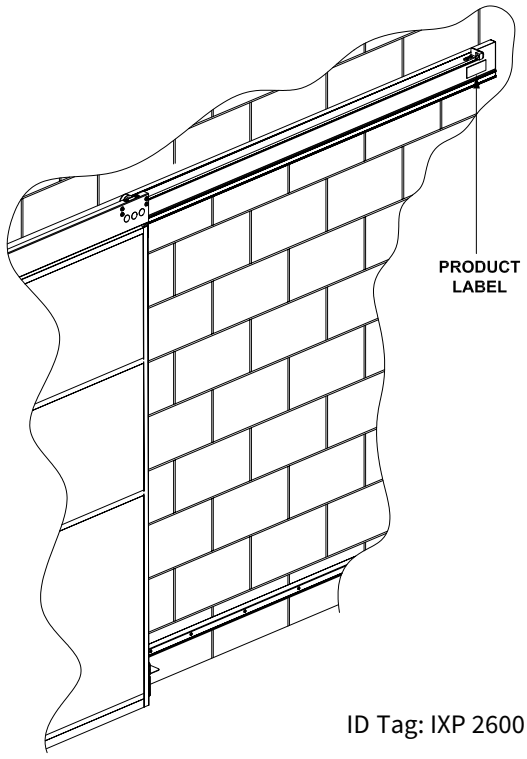

ID Tag: IXP 2600 Manual

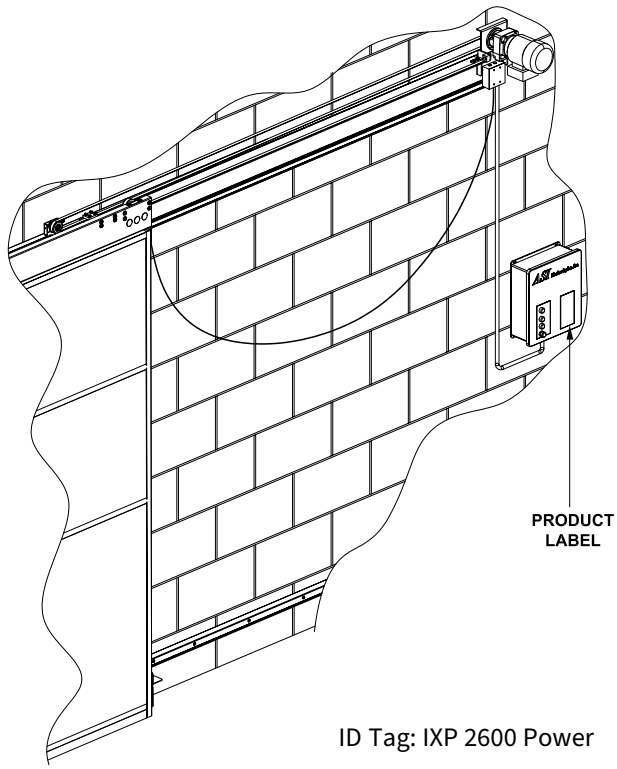

ID Tag: IXP 2600 Power

When ordering parts, specify Job Number, Door Number and Manufacture Date

Header Assemblies

MANUAL OPERATOR (RH SHOWN)

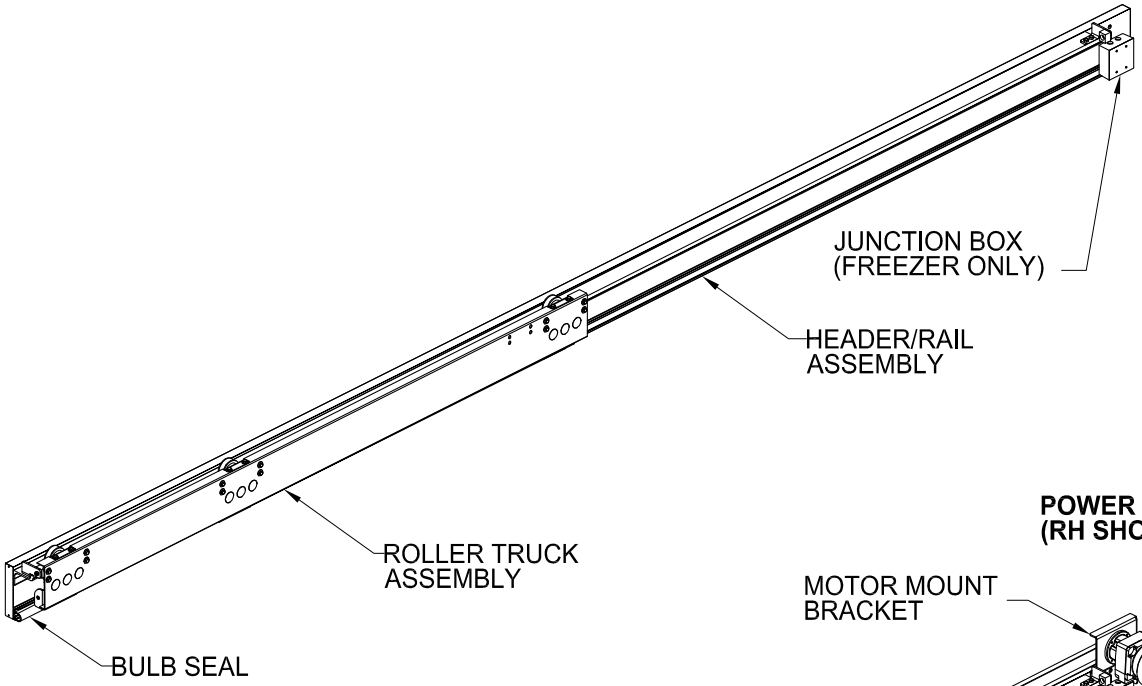

POWER OPERATOR (RH SHOWN)

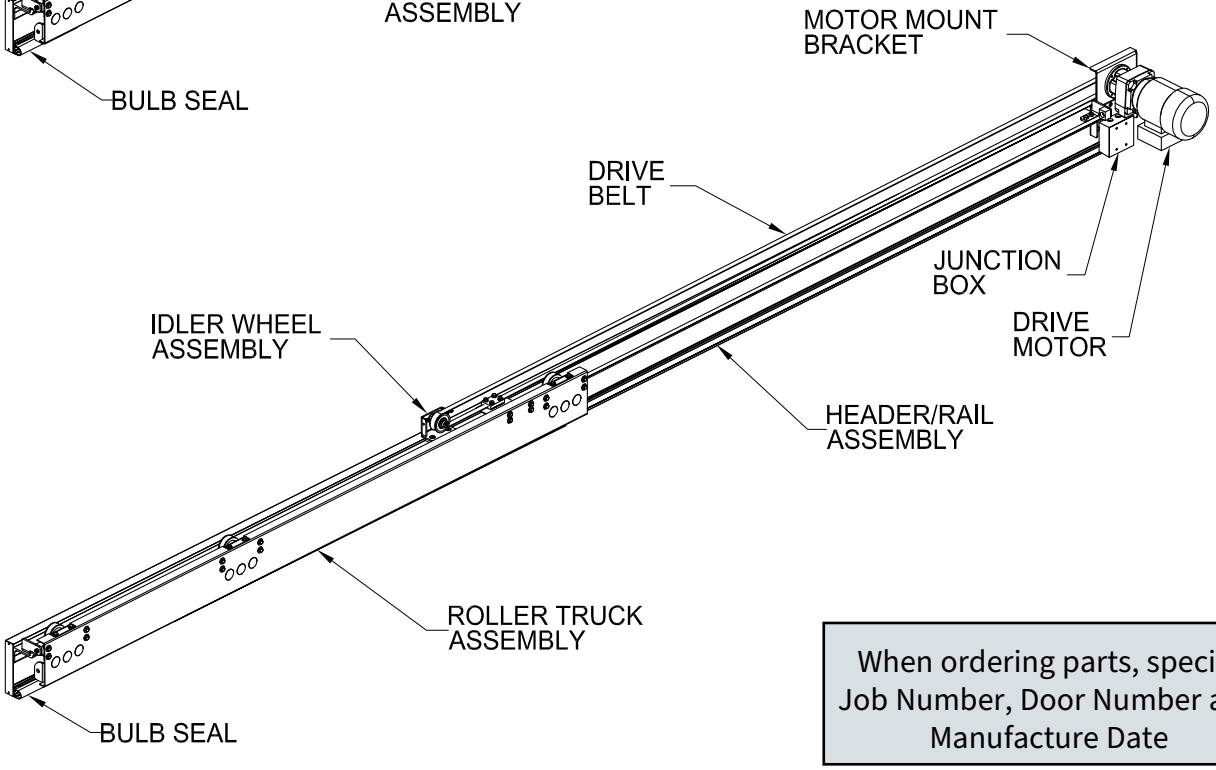

When ordering parts, specify Job Number, Door Number and Manufacture Date

Description	Part #
Header Assy, Alum, RH, Manual, Single-Slide, IXP Door	80D024
Header Assy, Alum, LH, Manual, Single-Slide, IXP Door	80D025
Header Assy, Alum, RH, Power, Single-Slide, IXP Door	80D028
Header Assy, Alum, LH, Power, Single-Slide, IXP Door	80D029

Manual Header Assemblies, RH

Part # 80D024

F4	F3	F2	F1	DESCRIPTION	PART #	ITEM #
-	-	-	1	ASM, HEADER, S\SLD IXP DOOR, RH, MAN, AL & GV, WIC <=96	80D024F1	-
-	-	1	-	ASM, HEADER, S\SLD IXP DOOR, RH, MAN, AL & S/S, WIC <=96	80D024F2	-
-	1	-	-	ASM, HEADER, S\SLD IXP DOOR, RH, MAN, AL & GV, WIC > 96	80D024F3	-
1	-	-	-	ASM, HEADER, S\SLD IXP DOOR, RH, MAN, AL & S/S, WIC > 96	80D024F4	-
-	-	-	1	HEADER ASSY, MAN, RH, S-SLD, IXP DOOR, WIC <=96, ZN	24B232F1	1
-	1	-	-	HEADER ASSY, MAN, RH, S-SLD, IXP DOOR, WIC > 96, ZN	24B232F2	1
-	-	1	-	HEADER ASSY, MAN, RH, S-SLD, IXP DOOR, WIC <=96, S/S	24B232F3	1
1	-	-	-	HEADER ASSY, MAN, RH, S-SLD, IXP DOOR, WIC > 96, S/S	24B232F4	1
-	2	-	2	COVER, ALUMINUM HEADER, GV	13A239F1	2
2	-	2	-	COVER, ALUMINUM HEADER, S/S	13A239F2	2
-	-	1	1	BULB / BLADE SEAL, TOP, IXP HEADER, WIC <= 96	15B017F1	3
1	1	-	-	BULB / BLADE SEAL, TOP, IXP HEADER, WIC > 96	15B017F2	3
-	1	-	1	ASM, END STOP, RH, IXP HEADER, ZN	24B0377RN10	4
1	-	1	-	ASM, END STOP, RH, IXP HEADER, S/S	24B0377RN20	4
-	1	-	1	ASM, END STOP, LH, IXP HEADER, ZN	24B0377LN10	5
1	-	1	-	ASM, END STOP, LH, IXP HEADER, S/S	24B0377LN20	5
-	1	-	1	ROLLER TRUCK ASSY, RH, MAN, S/SLD, IXP DOOR, GV	24B046F1	6
1	-	1	-	ROLLER TRUCK ASSY, RH, MAN, S/SLD, IXP DOOR, S/S	24B046F2	6
4	4	4	4	SCREW, #10 x .625, PH TRSMS, SS	41A158	7
4	4	4	4	SCREW, #8 x .75, SLDR, HEX	41A542	8
1	1	1	1	GROMMET, .875 ID (FREEZER ONLY)	11A086-B	9
1	1	1	1	JUNCTION BOX, WEATHERPROOF, 2-GANG (FREEZER ONLY)	22A003	10
1	1	1	1	COVER, ELECTRICAL, BLANK, 2-GANG (FREEZER ONLY)	22A004-A	11
2	2	2	2	BUSHING, SNAP (FREEZER ONLY)	22A221	12

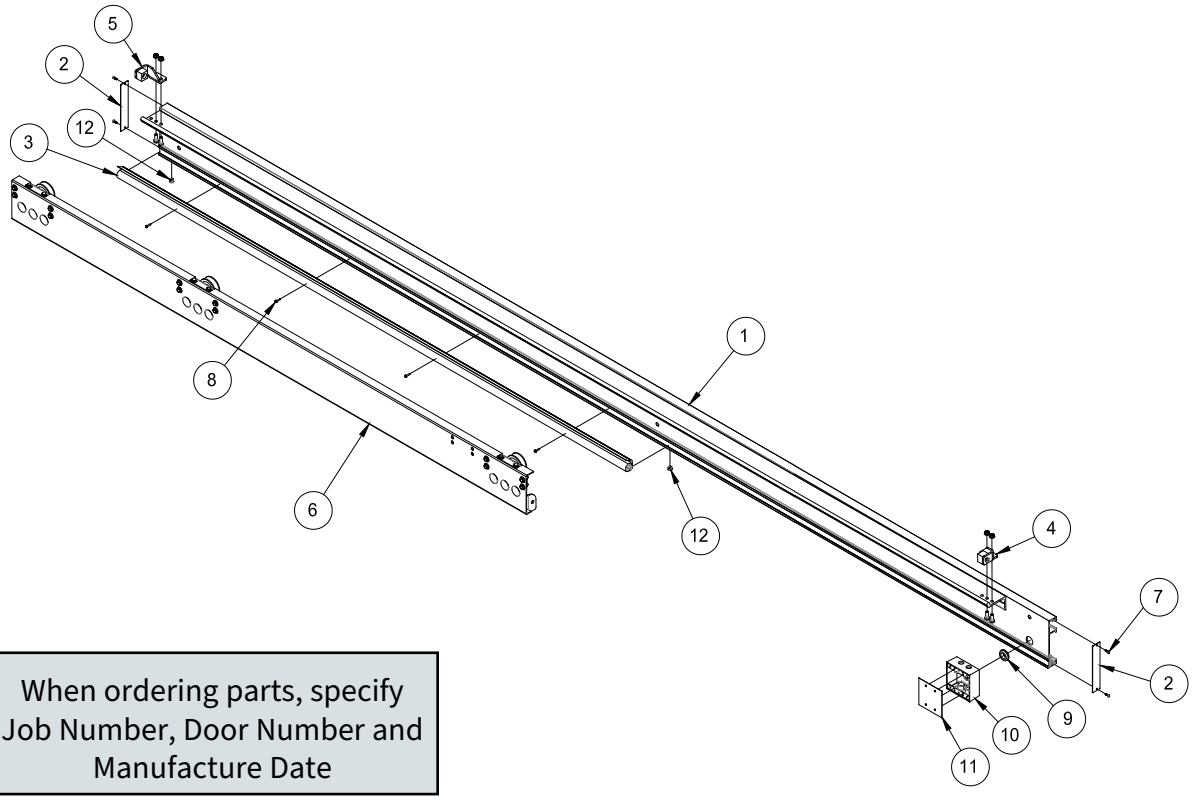

When ordering parts, specify Job Number, Door Number and Manufacture Date

REPLACEMENT PARTS

Manual Header Assemblies, LH

Part # 80D025

F4	F3	F2	F1	DESCRIPTION	PART #	ITEM #
-	-	-	1	ASM, HEADER, S\SLD IXP DOOR, LH, MAN, AL & GV, WIC <=96	80D025F1	-
-	-	1	-	ASM, HEADER, S\SLD IXP DOOR, LH, MAN, AL & S/S, WIC <=96	80D025F2	-
-	1	-	-	ASM, HEADER, S\SLD IXP DOOR, LH, MAN, AL & GV, WIC > 96	80D025F3	-
1	-	-	-	ASM, HEADER, S\SLD IXP DOOR, LH, MAN, AL & S/S, WIC > 96	80D025F4	-
-	-	-	1	HEADER ASSY, MAN, LH, S-SLD, IXP DOOR, WIC <=96, ZN	24B262F1	1
-	1	-	-	HEADER ASSY, MAN, LH, S-SLD, IXP DOOR, WIC > 96, ZN	24B262F2	1
-	-	1	-	HEADER ASSY, MAN, LH, S-SLD, IXP DOOR, WIC <=96, S/S	24B262F3	1
1	-	-	-	HEADER ASSY, MAN, LH, S-SLD, IXP DOOR, WIC > 96, S/S	24B262F4	1
-	2	-	2	COVER, ALUMINUM HEADER, GV	13A239F1	2
2	-	2	-	COVER, ALUMINUM HEADER, S/S	13A239F2	2
-	-	1	1	BULB / BLADE SEAL, TOP, IXP HEADER, WIC <= 96	15B017F1	3
1	1	-	-	BULB / BLADE SEAL, TOP, IXP HEADER, WIC > 96	15B017F2	3
-	1	-	1	ASM, END STOP, RH, IXP HEADER, ZN	24B0377RN10	4
1	-	1	-	ASM, END STOP, RH, IXP HEADER, S/S	24B0377RN20	4
-	1	-	1	ASM, END STOP, LH, IXP HEADER, ZN	24B0377LN10	5
1	-	1	-	ASM, END STOP, LH, IXP HEADER, S/S	24B0377LN20	5
-	1	-	1	ROLLER TRUCK ASSY, LH, MAN, S/SLD, IXP DOOR, GV	24B047F1	6
1	-	1	-	ROLLER TRUCK ASSY, LH, MAN, S/SLD, IXP DOOR, S/S	24B047F2	6
4	4	4	4	SCREW, #10 x .625, PH TRSMS, SS	41A158	7
4	4	4	4	SCREW, #8 x .75, SLDR, HEX	41A542	8
1	1	1	1	GROMMET, .875 ID (FREEZER ONLY)	11A086-B	9
1	1	1	1	JUNCTION BOX, WEATHERPROOF, 2-GANG (FREEZER ONLY)	22A003	10
1	1	1	1	COVER, ELECTRICAL, BLANK, 2-GANG (FREEZER ONLY)	22A004-A	11
2	2	2	2	BUSHING, SNAP (FREEZER ONLY)	22A221	12

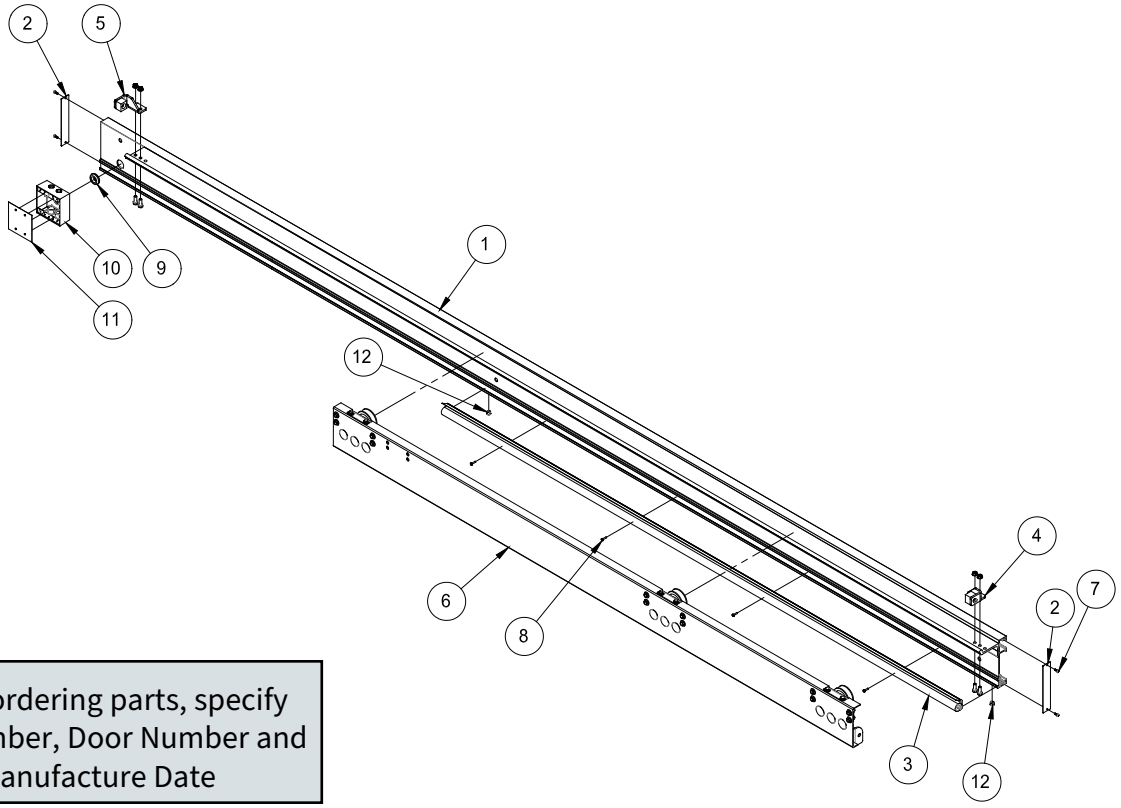

When ordering parts, specify Job Number, Door Number and Manufacture Date

REPLACEMENT PARTS

Power Header Assemblies, RH

Part # 80D028

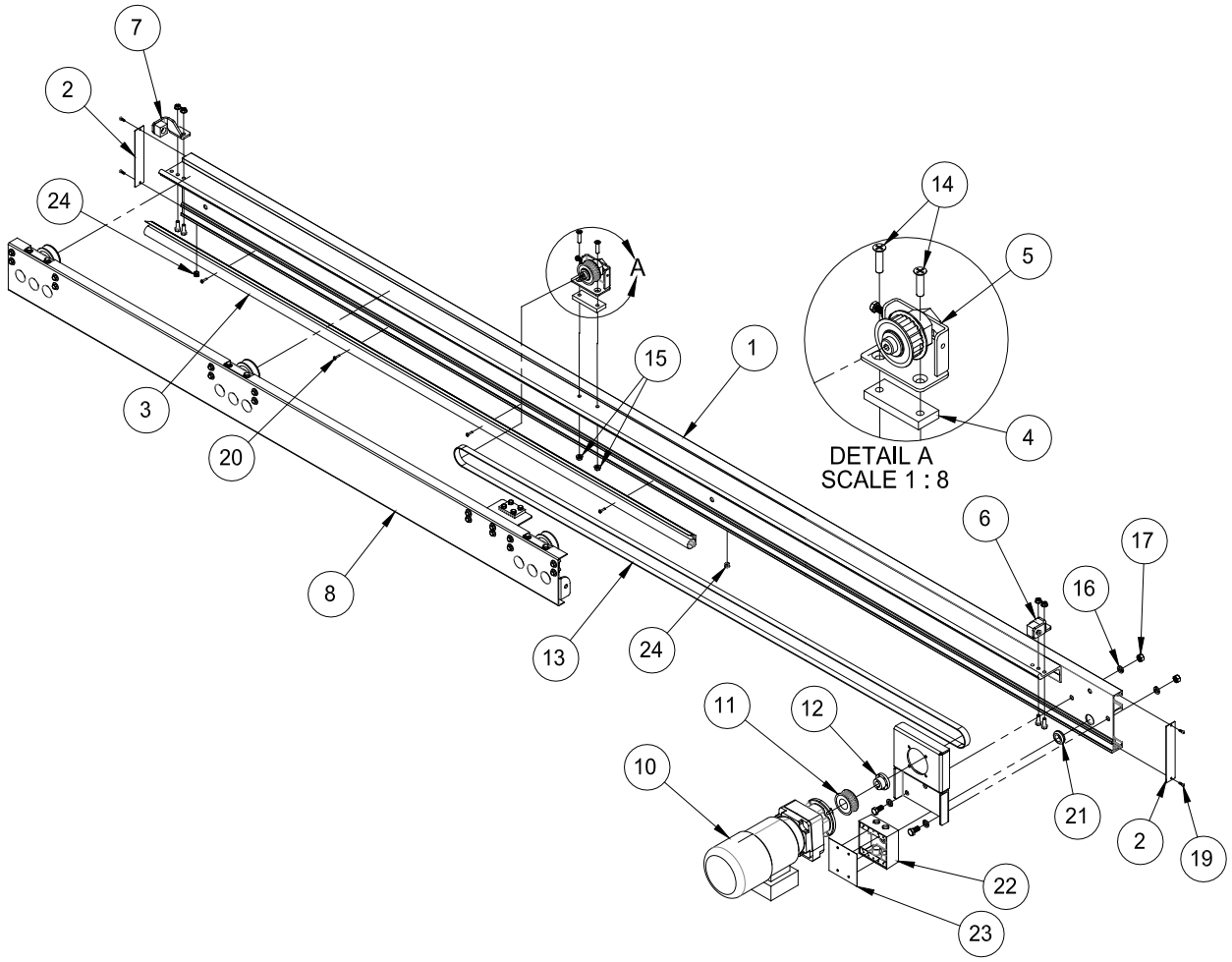

When ordering parts, specify Job Number, Door Number and Manufacture Date

REPLACEMENT PARTS

Power Header Assemblies, RH

Part # 80D028

F4	F3	F2	F1	DESCRIPTION	PART #	ITEM #
-	-	-	1	ASM, HEADER, S\SLD IXP DOOR, RH, PWR, AL & GV, WIC <=96	80D028F1	-
-	-	1	-	ASM, HEADER, S\SLD IXP DOOR, RH, PWR, AL & S/S, WIC <=96	80D028F2	-
-	1	-	-	ASM, HEADER, S\SLD IXP DOOR, RH, PWR, AL & GV, WIC > 96	80D028F3	-
1	-	-	-	ASM, HEADER, S\SLD IXP DOOR, RH, PWR, AL & S/S, WIC > 96	80D028F4	-
-	-	-	1	HEADER ASSY, PWR, RH, S-SLD, IXP DOOR, WIC <= 96, ZN	24B139F1	1
-	1	-	-	HEADER ASSY, PWR, RH, S-SLD, IXP DOOR, WIC > 96, ZN	24B139F2	1
-	-	1	-	HEADER ASSY, PWR, RH, S-SLD, IXP DOOR, WIC <= 96, S/S	24B139F3	1
1	-	-	-	HEADER ASSY, PWR, RH, S-SLD, IXP DOOR, WIC > 96, S/S	24B139F4	1
-	2	-	2	COVER, ALUMINUM HEADER, GV	13A239F1	2
2	-	2	-	COVER, ALUMINUM HEADER, S/S	13A239F2	2
-	-	1	1	BULB / BLADE SEAL, TOP, IXP HEADER, WIC <= 96	15B017F1	3
1	1	-	-	BULB / BLADE SEAL, TOP, IXP HEADER, WIC > 96	15B017F2	3
-	1	-	1	RISER BLOCK, IDLER WHEEL, MKT-IXP DOOR, ZN	13A245F1	4
1	-	1	-	RISER BLOCK, IDLER WHEEL, MKT-IXP DOOR, S/S	13A245F2	4
-	1	-	1	ASSY, IDLER ROLLER WHEEL, IXP DOORS, ZN	24B075F1	5
1	-	1	-	ASSY, IDLER ROLLER WHEEL, IXP DOORS, S/S	24B075F2	5
-	1	-	1	ASM, END STOP, RH, IXP HEADER, ZN	24B0377RN10	6
1	-	1	-	ASM, END STOP, RH, IXP HEADER, S/S	24B0377RN20	6
-	1	-	1	ASM, END STOP, LH, IXP HEADER, ZN	24B0377LN10	7
1	-	1	-	ASM, END STOP, LH, IXP HEADER, S/S	24B0377LN20	7
-	1	-	1	ROLLER TRUCK ASSY, RH, PWR, S/SLD, IXP DOOR, GV	24B259F1	8
1	-	1	-	ROLLER TRUCK ASSY, RH, PWR, S/SLD, IXP DOOR, S/S	24B259F2	8
-	1	-	1	BRACKET, MOTOR MTG, RH, MKT-IXP DOOR, ZN	13B279F1	9
1	-	1	-	BRACKET, MOTOR MTG, RH, MKT-IXP DOOR, S/S	13B279F2	9
1	1	1	1	NORD SK172.1F-80L/4 MOTOR	23B044	10
-	1	-	1	SPROCKET, DRIVE, ZN	50A122	11
1	-	1	-	SPROCKET, DRIVE, S/S	50A133	11
1	1	1	1	BUSHING, DRIVE, IXP W/ECTI - TB WOODS# JA-3/4	50A129	12
1	1	1	1	BELT, SINGLE-SLIDE, MKT DOOR (WICx2+72")	50A	13
-	2	-	2	SCREW, 3/8-16 X 1.500 SL FHMS, ZN	41A364	14
2	-	2	-	SCREW, 3/8-16 X 1.500 SL FHMS, S/S	41A814	14
-	2	-	2	NUT, 3/8-16. WZLK, ZN	41A216	15
2	-	2	-	NUT, 3/8-16. WZLK, S/S	41A710	15
-	4	-	4	WASHER, LOCK, 1/2, REG SPLIT, ZN	41A119	16
4	-	4	-	WASHER, LOCK, 1/2, REG SPLIT, S/S	41A558	16
-	2	-	2	NUT, 1/2-13, HEX, ZN	41A120	17
2	-	2	-	NUT, 1/2-13, HEX, S/S	41A515	17
-	2	-	2	SCREW, 1/2-13 x 1.00, HHCS, ZN	41A388	18
2	-	2	-	SCREW, 1/2-13 x 1.25, HHCS, S/S	41A478	18
4	4	4	4	SCREW, #10 x .625, PH TRSMS, SS	41A158	19
4	4	4	4	SCREW, #8 x .75, SLDR, HEX	41A542	20
1	1	1	1	GROMMET, .875 ID (FREEZER ONLY)	11A086-B	21
1	1	1	1	JUNCTION BOX, WEATHERPROOF, 2-GANG (FREEZER ONLY)	22A003	22
1	1	1	1	COVER, ELECTRICAL, BLANK, 2-GANG (FREEZER ONLY)	22A004-A	23
2	2	2	2	BUSHING, SNAP (FREEZER ONLY)	22A221	24

When ordering parts, specify Job Number, Door Number and Manufacture Date

Power Header Assemblies, RH

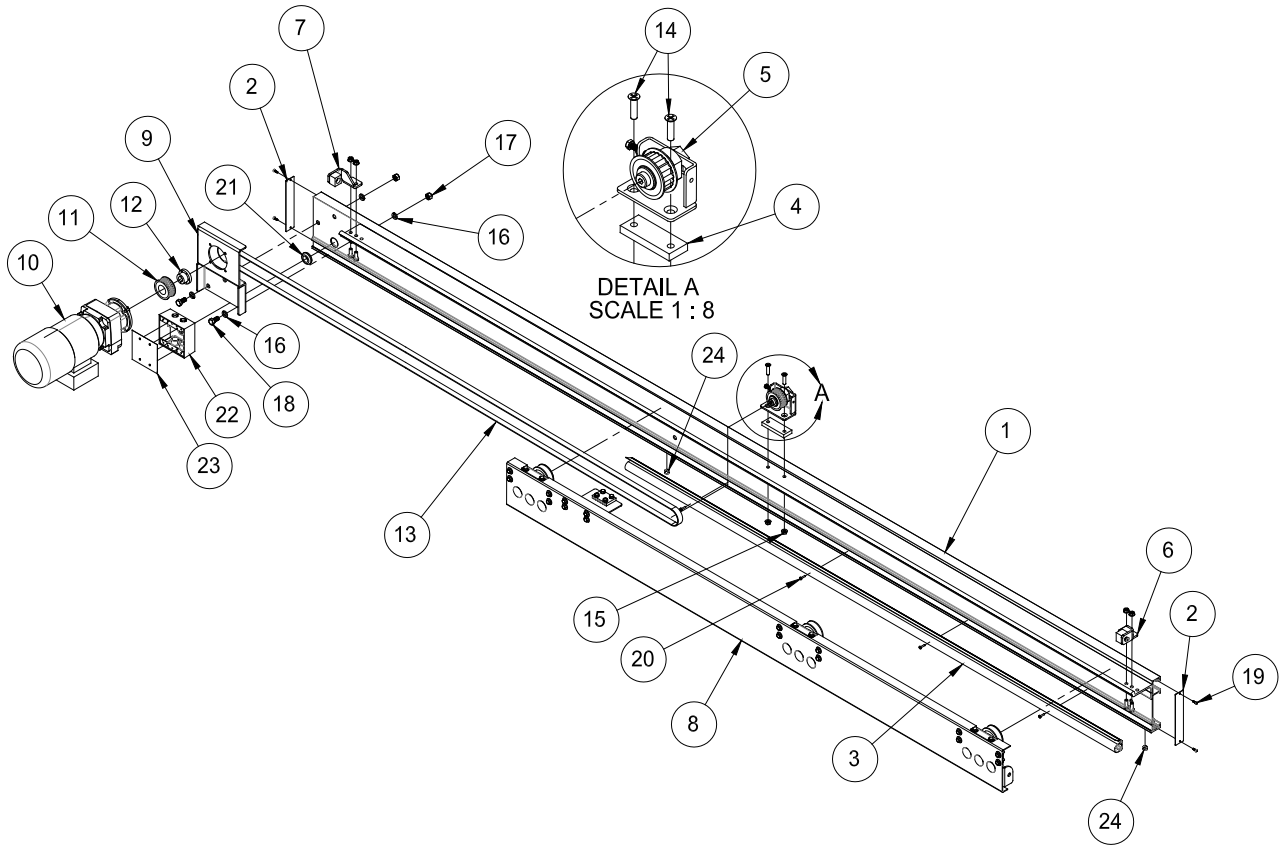

When ordering parts, specify Job Number, Door Number and Manufacture Date

End Stop Assemblies

Part # 80D029

F4	F3	F2	F1	DESCRIPTION	PART #	ITEM #
-	-	-	1	ASM, HEADER, S\SLD IXP DOOR, LH, PWR, AL & GV, WIC <=96	80D029F1	-
-	-	1	-	ASM, HEADER, S\SLD IXP DOOR, LH, PWR, AL & S/S, WIC <=96	80D029F2	-
-	1	-	-	ASM, HEADER, S\SLD IXP DOOR, LH, PWR, AL & GV, WIC > 96	80D029F3	-
1	-	-	-	ASM, HEADER, S\SLD IXP DOOR, LH, PWR, AL & S/S, WIC > 96	80D029F4	-
-	-					
-	-	-	1	HEADER ASSY, PWR, LH, S-SLD, IXP DOOR, WIC <=96, ZN	24B260F1	1
-	1	-	-	HEADER ASSY, PWR, LH, S-SLD, IXP DOOR, WIC > 96, ZN	24B260F2	1
-	-	1	-	HEADER ASSY, PWR, LH, S-SLD, IXP DOOR, WIC <=96, S/S	24B260F3	1
1	-	-	-	HEADER ASSY, PWR, LH, S-SLD, IXP DOOR, WIC > 96, S/S	24B260F4	1
-	2	-	2	COVER, ALUMINUM HEADER, GV	13A239F1	2
2	-	2	-	COVER, ALUMINUM HEADER, S/S	13A239F2	2
-	-	1	1	BULB / BLADE SEAL, TOP, IXP HEADER, WIC <= 96	15B017F1	3
1	1	-	-	BULB / BLADE SEAL, TOP, IXP HEADER, WIC > 96	15B017F2	3
-	1	-	1	RISER BLOCK, IDLER WHEEL, MKT-IXP DOOR, ZN	13A245F1	4
1	-	1	-	RISER BLOCK, IDLER WHEEL, MKT-IXP DOOR, S/S	13A245F2	4
-	1	-	1	ASSY, IDLER ROLLER WHEEL, IXP DOORS, ZN	24B075F1	5
1	-	1	-	ASSY, IDLER ROLLER WHEEL, IXP DOORS, S/S	24B075F2	5
-	1	-	1	ASM, END STOP, RH, IXP HEADER, ZN	24B0377RN10	6
1	-	1	-	ASM, END STOP, RH, IXP HEADER, S/S	24B0377RN20	6
-	1	-	1	ASM, END STOP, LH, IXP HEADER, ZN	24B0377LN10	7
1	-	1	-	ASM, END STOP, LH, IXP HEADER, S/S	24B0377LN20	7
-	1	-	1	ROLLER TRUCK ASSY, LH, PWR, S/SLD, IXP DOOR, GV	24B055F1	8
1	-	1	-	ROLLER TRUCK ASSY, LH, PWR, S/SLD, IXP DOOR, S/S	24B055F2	8
-	1	-	1	BRACKET, MOTOR MTG, LH, MKT-IXP DOOR, ZN	13B1173F1	9
1	-	1	-	BRACKET, MOTOR MTG, LH, MKT-IXP DOOR, GV	13B1173F2	9
1	1	1	1	NORD SK172.1F-80L/4 MOTOR	23B044	10
-	1	-	1	SPROCKET, DRIVE, ZN	50A122	11
1	-	1	-	SPROCKET, DRIVE, S/S	50A133	11
1	1	1	1	BUSHING, DRIVE, IXP W/ECTI - TB WOODS# JA-3/4	50A129	12
1		1	1	BELT, SINGLE-SLIDE, MKT DOOR	50A135	13
-	2	-	2	SCREW, 3/8-16 X 1.500 SL FHMS, ZN	41A364	14
2	-	2	-	SCREW, 3/8-16 X 1.500 SL FHMS, S/S	41A814	14
-	2	-	2	NUT, 3/8-16. WZLK, ZN	41A216	15
2	-	2	-	NUT, 3/8-16. WZLK, S/S	41A710	15
-	4	-	4	WASHER, LOCK, 1/2, REG SPLIT, ZN	41A119	16
4	-	4	-	WASHER, LOCK, 1/2, REG SPLIT, S/S	41A558	16
-	2	-	2	NUT, 1/2-13, HEX, ZN	41A120	17
2	-	2	-	NUT, 1/2-13, HEX, S/S	41A515	17
-	2	-	2	SCREW, 1/2-13 x 1.00, HHCS, ZN	41A388	18
2	-	2	-	SCREW, 1/2-13 x 1.25, HHCS, S/S	41A478	18
4	4	4	4	SCREW, #10 x .625, PH TRSMS, SS	41A158	19
4	4	4	4	SCREW, #8 x .75, SLDR, HEX	41A542	20
1	1	1	1	GROMMET, .875 ID	11A086-B	21
1	1	1	1	JUNCTION BOX, WEATHERPROOF, 2-GANG	22A003	22
1	1	1	1	COVER, ELECTRICAL, BLANK, 2-GANG	22A004-A	23
2	2	2	2	BUSHING, SNAP, HEYCO #2053	22A221	24

When ordering parts, specify Job Number, Door Number and Manufacture Date

Roller Truck Assemblies, RH

Part # 24B046, Manual, RH
& 24B259, Power, RH

Note:
24B259 (Power RH) shown.
For 24B046 manual RH Asm, item #3, belt bracket, item #4, clamp plate, and related fasteners omitted.

F4	F3	F2	F1	DESCRIPTION	PART #	ITEM
-	-	-	1	ROLLER TRK ASM, RH PWR, S/SLD, IXP, GV	24B259F1	-
-	-	1	-	ROLLER TRK ASM, RH PWR, S/SLD, IXP, S/S	24B259F2	-
-	1	-	-	ROLLER TRK ASM, RH PWR, S/SLD, IXP, HD, GV	24B259F3	-
1	-	-	-	ROLLER TRK ASM, RH PWR, S/SLD, IXP, HD, S/S	24B259F4	-
-	1	-	1	BRACE, TROLLEY, RH, S/SLD, IXP DOOR, GALV	13B1170F1	1
1	-	1	-	BRACE, TROLLEY, RH, S/SLD, IXP DOOR, S/S	13B1170F2	1
-	-	-	3	TROLLEY, IXP DOOR, STD, ZINC	24B022F1	2
-	-	3	-	TROLLEY, IXP DOOR, STD, S/S	24B022F2	2
-	3	-	-	TROLLEY, IXP DOOR, HD, ZINC	24B298F1	2
3	-	-	-	TROLLEY, IXP DOOR, HD, S/S	24B298F2	2
-	1	-	1	BELT BRACKET, RH & LH SLIDES, ZINC	13B1149F1	3
1	-	1	-	BELT BRACKET, RH & LH SLIDES, S/S	13B1149F2	3
1	1	1	1	CLAMP PLATE, 8MM HTD BELT	14A191	4
-	8	-	8	SCREW, 5/16-18 x 1.00, HHCS, ZN	41A061	5
8	-	8	-	SCREW, 5/16-18 x 1.00, HHMS, SS	41A346	5
-	12	-	12	SCREW, 5/16-18 x .625, HHCS, ZN	41A113	6
12	-	12	-	SCREW, 5/16-18 x .625, HHCS, SS	41A611	6
-	16	-	16	WASHER, FLAT, 5/16, STANDARD, ZN	41A126	7
16	-	16	-	WASHER, FLAT, 5/16, STANDARD, SS	41A608	7
-	8	-	8	WASHER,LOCK,5/16,REG.SPLIT ,ZN	41A093	8
8	-	8	-	WASHER,LOCK,5/16,REG.SPLIT ,SS	41A347	8
-	4	-	4	HEX NUT, 5/16-18, ZN	41A092	9
4	-	4	-	HEX NUT, 5/16-18, SS	41A345	9
-	12	-	12	NUT, 5/16 WHIZLOCK, ZN	41A033	10
12	-	12	-	NUT, 5/16 WHIZLOCK, SS	41A712	10
9	9	9	9	HOLE PLUG, 302 S/S, 1-3/8" DIA.	16A115	11

When ordering parts, specify Job Number, Door Number and Manufacture Date

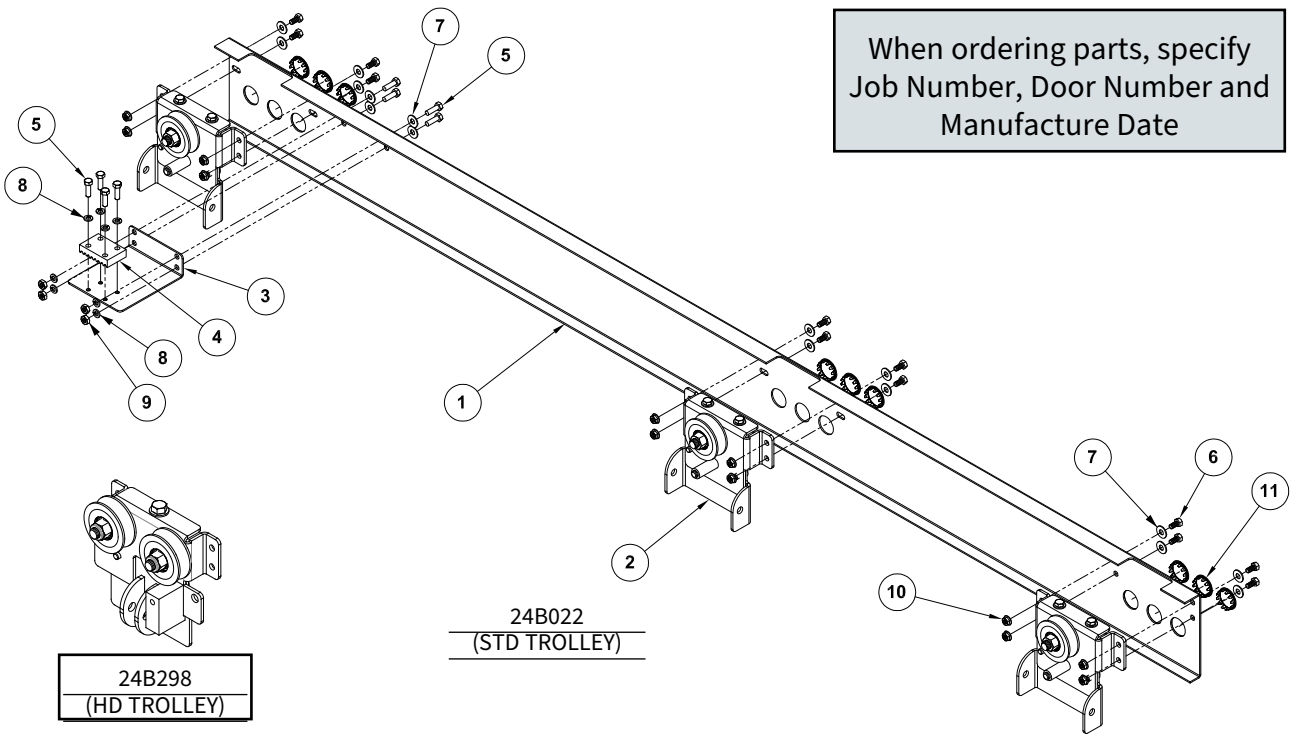

24B022
(STD TROLLEY)

24B298
(HD TROLLEY)

REPLACEMENT PARTS

Roller Truck Assemblies, LH

24B047, Manual, LH
& 24B055, Power, LH

Note:
24B055 (Power LH) shown.
For 24B047 manual LH Asm, item #3, belt bracket, item #4, clamp plate, and related fasteners omitted.

F4	F3	F2	F1	DESCRIPTION	PART #	ITEM
-	-	-	1	ROLLER TRUCK ASM, LH PWR, S/SLD, IXP, GV	24B055F1	-
-	-	1	-	ROLLER TRUCK ASM, LH PWR, S/SLD, IXP, S/S	24B055F2	-
-	1	-	-	ROLLER TRUCK ASM, LH PWR, S/SLD, IXP, HD, GV	24B055F3	-
1	-	-	-	ROLLER TRUCK ASM, LH PWR, S/SLD, IXP, HD, S/S	24B055F4	-
-	1	-	1	BRACE, TROLLEY, LH, S/SLD, IXP DOOR, GALV	13B1175F1	1
1	-	1	-	BRACE, TROLLEY, LH, S/SLD, IXP DOOR, S/S	13B1175F2	1
-	-	-	3	TROLLEY, IXP DOOR, STD, ZINC	24B022F1	2
-	-	3	-	TROLLEY, IXP DOOR, STD, S/S	24B022F2	2
-	3	-	-	TROLLEY, IXP DOOR, HD, ZINC	24B298F1	2
3	-	-	-	TROLLEY, IXP DOOR, HD, S/S	24B298F2	2
-	1	-	1	BELT BRACKET, RH & LH SLIDES, ZINC	13B1149F1	3
1	-	1	-	BELT BRACKET, RH & LH SLIDES, S/S	13B1149F2	3
1	1	1	1	CLAMP PLATE, 8MM HTD BELT	14A191	4
-	8	-	8	SCREW, 5/16-18 x 1.00, HHCS, ZN	41A061	5
8	-	8	-	SCREW, 5/16-18 x 1.00, HHMS, SS	41A346	5
-	12	-	12	SCREW, 5/16-18 x .625, HHCS, ZN	41A113	6
12	-	12	-	SCREW, 5/16-18 x .625, HHCS, SS	41A611	6
-	16	-	16	WASHER, FLAT, 5/16, STANDARD, ZN	41A126	7
16	-	16	-	WASHER, FLAT, 5/16, STANDARD, SS	41A608	7
-	8	-	8	WASHER,LOCK,5/16,REG.SPLIT ,ZN	41A093	8
8	-	8	-	WASHER,LOCK,5/16,REG.SPLIT ,SS	41A347	8
-	4	-	4	HEX NUT, 5/16-18, ZN	41A092	9
4	-	4	-	HEX NUT, 5/16-18, SS	41A345	9
-	12	-	12	NUT, 5/16 WHIZLOCK, ZN	41A033	10
12	-	12	-	NUT, 5/16 WHIZLOCK, SS	41A712	10
9	9	9	9	HOLE PLUG, 302 S/S, 1-3/8" DIA.	16A115	11

When ordering parts, specify Job Number, Door Number and Manufacture Date

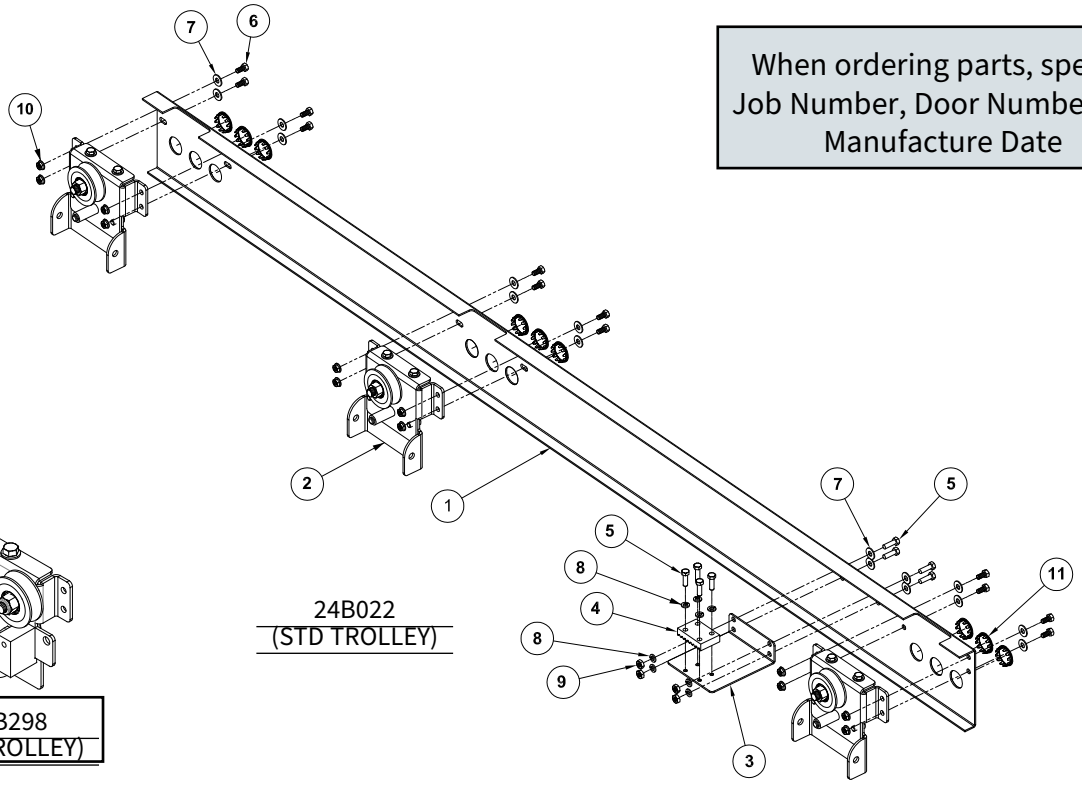

24B022
(STD TROLLEY)

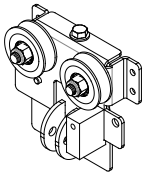

24B298
(HD TROLLEY)

REPLACEMENT PARTS

Trolley, STD Duty

Part # 24B022

F2	F1	DESCRIPTION	PART #	ITEM #
-	1	TROLLEY ASSY, IXP DOOR, ZINC	24B022F1	-
1	-	TROLLEY ASSY, IXP DOOR, S/S	24B022F2	
-	1	HEIGHT ADJUSTMENT BRACKET, ZINC	13B1146F1	1
1	-	HEIGHT ADJUSTMENT BRACKET, S/S	13B1146F2	1
-	1	ROLLER WHEEL BRACKET, ZINC	13B1147F1	2
1	-	ROLLER WHEEL BRACKET, S/S	13B1147F2	2
-	1	SPACER, TROLLEY, 5/8 ID X 1.00 OD	12B028F1	3
1	-	SPACER, TROLLEY, 5/8 ID X 1.00 OD	12B028F2	3
1	1	JUMP BLOCK, IXP DOOR	14B204-A	4
1	1	ROLLER WHEEL	24B076	5
-	1	SCREW, 5/8-11 x 2.25, HHCS, ZN	41A818	6
1	-	SCREW, 5/8-11 x 2.25, HHCS, SS	41A819	6
-	1	NUT, 5/8-11, NYLOCK, HEX, ZN	41A136	7
1	-	NUT, 5/8-11, NYLOCK, HEX, SS	41A803	7
-	1	WASHER, LOCK, 1/2, REG SPLIT, ZN	41A119	8
1	-	WASHER, LOCK, 1/2, REG SPLIT, SS	41A558	8
-	1	SCREW, 1/2-13x 2.25, GR5, HHCS, ZN	41A002	9
1	-	SCREW, 1/2-13x 2.25, HHCS, SS	41A802	9
-	2	SCREW, 3/8-16 X 5/8 WHIZ ZN	41A297	10
2	-	SCREW, 3/8-16 X 5/8 WHIZ SS	41A839	10
4	4	WASHER, FLAT, 3/8, SS	41A203	11
-	2	NUT, 3/8-16, LOCK, NYLON, ZN	41A220	12
2	-	NUT, 3/8-16, LOCK, NYLON, SS	41A770	12
-	2	SCREW, 3/8-16 X 3.00, F/T, HHCS, ZN	41A799	13
2	-	SCREW, 3/8-16 X 3.00, F/T, HHCS, SS	41A800	13
A/R	A/R	LOCTITE, #242 THREADLOCK	10A010	14

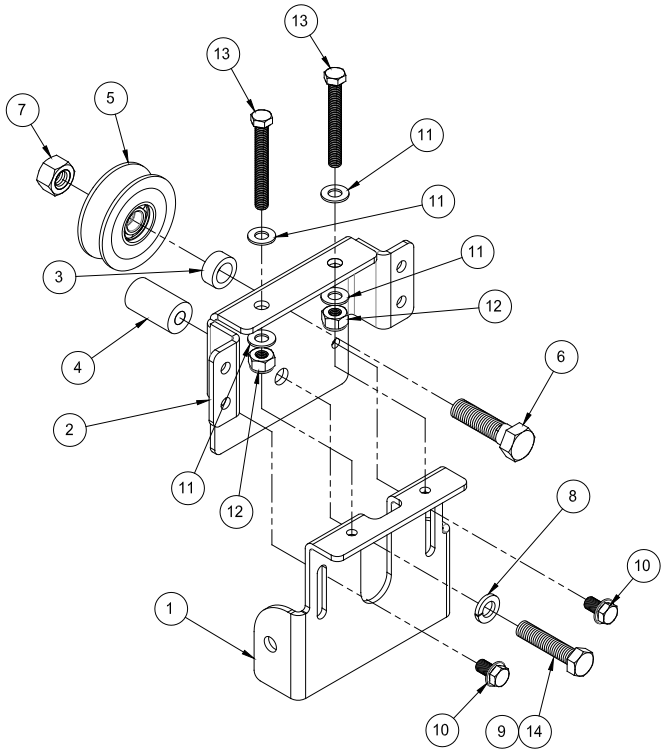

When ordering parts, specify Job Number, Door Number and Manufacture Date

REPLACEMENT PARTS

Trolley, Heavy Duty

Part # 24B298

F2	F1	DESCRIPTION	PART #	ITEM #
-	1	TROLLEY ASSEMBLY, HEAVY DUTY, IXP DOOR, ZINC	24B298F1	-
1	-	TROLLEY ASSEMBLY, HEAVY DUTY, IXP DOOR, S/S	24B298F2	-
-	1	HD ROLLER WHEEL BRACKET, IXP DOOR, ZINC	13B1261F1	1
1	-	HD ROLLER WHEEL BRACKET, IXP DOOR, S/S	13B1261F2	1
-	1	WELDMENT, ADJUSTMENT BRACKET, IXP DOOR, ZINC	28B246F1	2
1	-	WELDMENT, ADJUSTMENT BRACKET, IXP DOOR, S/S	28B246F2	2
-	2	SPACER, TROLLEY, 5/8 ID X 1.00 OD, ZN	12B028F1	3
2	-	SPACER, TROLLEY, 5/8 ID X 1.00 OD, S/S	12B028F2	3
2	2	ROLLER WHEEL	24B076-2	4
1	1	JUMP BLOCK, IXP HEAVY DUTY TROLLEY	14B221-B	5
-	2	SCREW, 5/8-11 x 2.25, HHCS, ZN	41A818	6
2	-	SCREW, 5/8-11 x 2.25, HHCS, S/S	41A819	6
-	1	SCREW, 1/2-13 X 3.00, F/T, HHCS, ZN	41A831	7
1	-	SCREW, 1/2-13 X 3.00, F/T, HHCS, S/S	41A832	7
-	2	WASHER, FLAT, 1/2", ZN, 1-1/16" OD	41A201	8
2	-	WASHER, FLAT, 1/2", S/S, 1-1/16" OD	41A213	8
-	1	NUT, 1/2-13 NYLON LOCK, HEX, ZN	41A137	9
1	-	NUT, 1/2-13 NYLON LOCK, HEX, S/S	41A804	9
-	2	NUT, 5/8-11, NYLOCK, HEX, ZN	41A136	10
2	-	NUT, 5/8-11, NYLOCK, HEX, S/S	41A803	10
-	1	SCREW, 3/8-16 X 2.00 WHIZ, ZN	41A837	11
1	-	SCREW, 3/8-16 X 2.00 WHIZ S/S	41A838	11
-	1	SCREW, 3/8-16 X 5/8 WHIZ ZN	41A297	12
1	-	SCREW, 3/8-16 X 5/8 WHIZ S/S	41A839	12
A/R	A/R	LOCTITE, #242 THREADLOCK	10A010	13

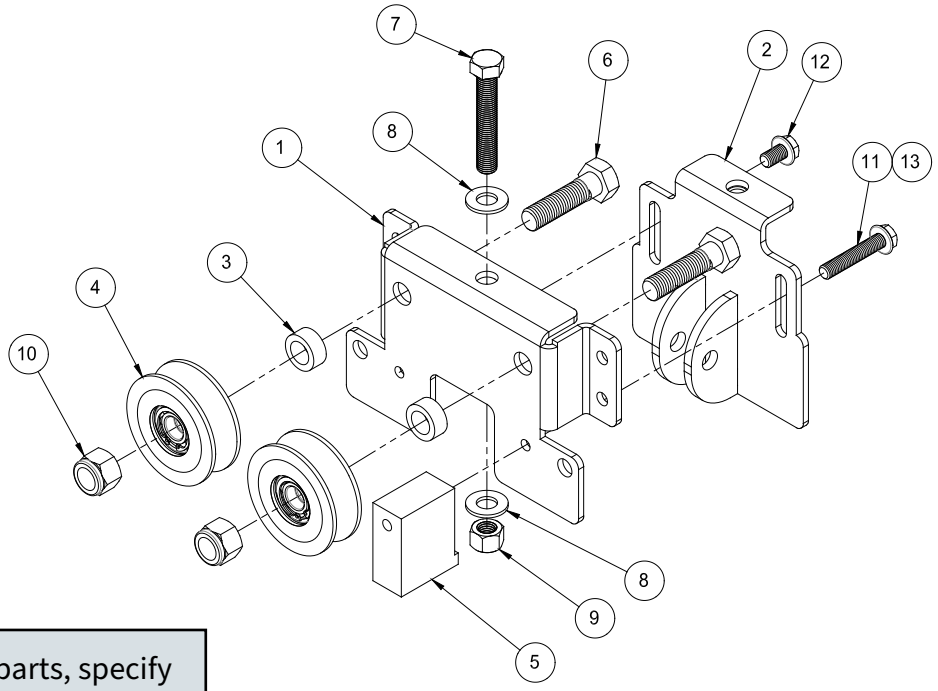

When ordering parts, specify Job Number, Door Number and Manufacture Date

REPLACEMENT PARTS

Door Panel Assemblies, LH

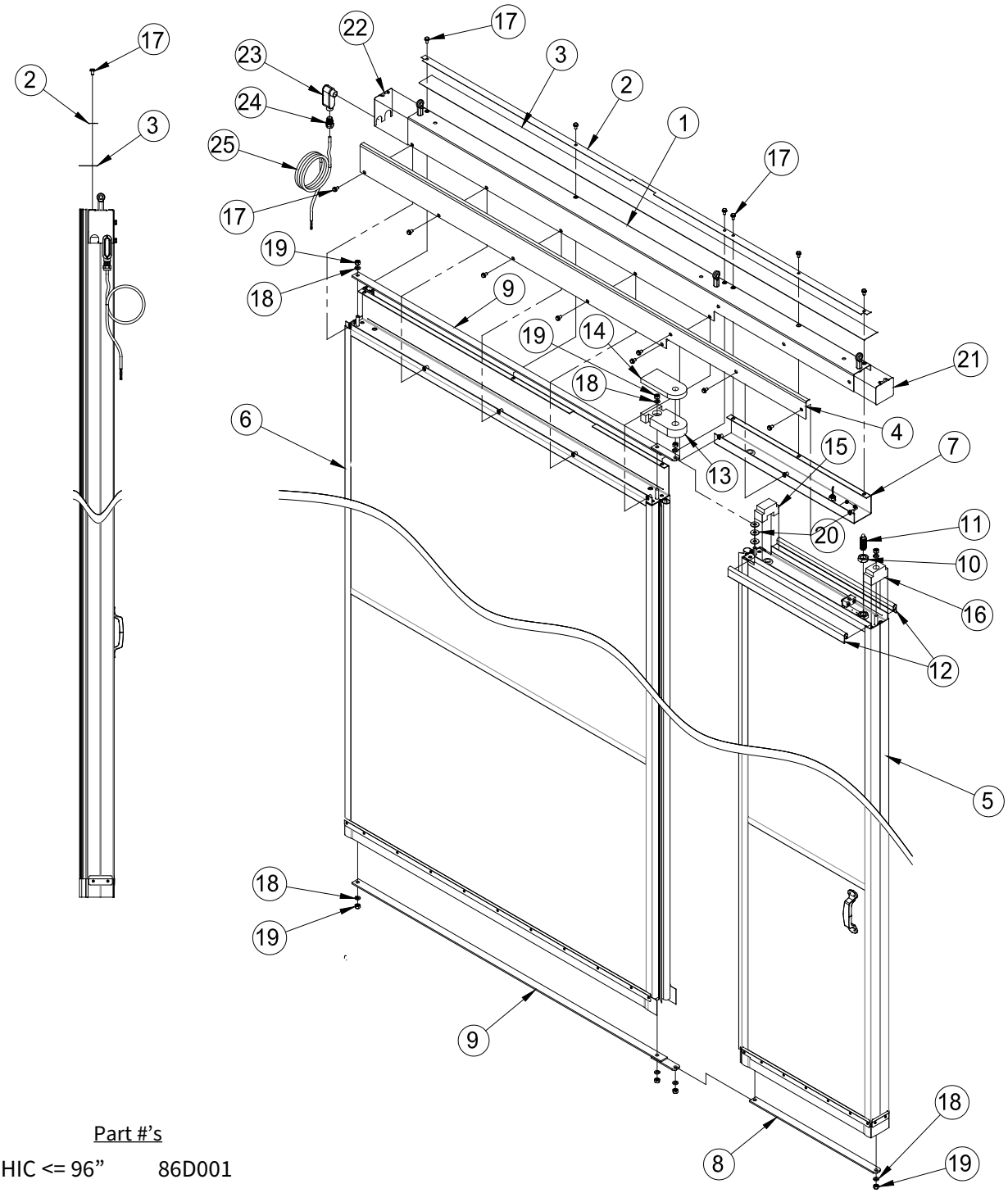

Part #'s

HIC <= 96"	86D001
HIC >96"< 144"	86D002
HIC > 144"	86D003

When ordering parts, specify Job Number, Door Number and Manufacture Date

Door Panel Assembly, LH

F2	F1	DESCRIPTION	PART #	ITEM #
-	-	DOOR ASSY, S\SLD, LH, IXP, GALV	86DXXXF1	-
1	-	DOOR ASSY, S\SLD, LH, IXP, S/S	86DXXXF2	-
	-			
1	1	ASSY, HEADER CHNL, LH, S\SLD, IXP, GALV	24B269F1	1
1	-	ASSY, HEADER CHNL, LH, S\SLD, IXP, S/S	24B269F2	1
-	1	RETAINER, GASKET, TOP, IXP, S/SLD, LH, GALV	13B1415F1	2
1	-	RETAINER, GASKET, TOP, IXP, S/SLD, LH, S/S	13B1415F2	2
1	1	GASKET, 3.00", URETHANE, BLACK, WIC + 7.00"	15A017	3
-	1	PLATE, DBLR, HDR CHNL, LH, S\SLD, IXP, GALV	13B1407F1	4
1	-	PLATE, DBLR, HDR CHNL, LH, S\SLD, IXP, S/S	13B1407F2	4
-	1	ASM, SWING, S\SLD, LH, IXP DOOR, GALV	86DXXXF1	5
1	-	ASM, SWING, S\SLD, LH, IXP DOOR, S/S	86DXXXF2	5
-	1	ASM, FIXED, S\SLD, LH, IXP DOOR, GALV	86DXXXF1	6
1	-	ASM, FIXED, S\SLD, LH, IXP DOOR, S/S	86DXXXF2	6
-	1	ASSY, SWING DOOR CAP, LH, IXP, GALV	24B270F1	7
1	-	ASSY, SWING DOOR CAP, LH, IXP, S/S	24B270F2	7
-	1	PIVOT BAR, SWING PANEL, IXP DOOR, HR	14B179F1	8
1	-	PIVOT BAR, SWING PANEL, IXP DOOR, S/S	14B179F2	8
-	2	WELDMENT, PIVOT BAR, IXP DOOR, HR	28B097F1	9
2	-	WELDMENT, PIVOT BAR, IXP DOOR, S/S	28B097F2	9
-	1	NUT, 1-8 UNC, JAM, HEX, ZN	41A198	10
1	-	NUT, 1-8 UNC, JAM, HEX, SS	41A834	10
1	1	SPRING PLUNGER, 1"-8 UNC	41A797	11
2	2	BULB SEAL, SWING PANEL, IXP DOOR	15A030	12
1	1	PIVOT BLOCK, RADIUS, SWING, BOTTOM, IXP DOOR	11A080	13
1	1	PIVOT BLOCK, RADIUS, SWING, TOP, IXP DOOR	11A081	14
1	1	SEAL BLOCK, CENTER, SWING, IXP DOOR	11A089	15
1	1	SEAL BLOCK, LEAD EDGE, SWING, IXP DOOR	11A091	16
-	14	SCREW, 3/8-16 X 5/8 WHIZ ZN	41A297	17
14	-	SCREW, 3/8-16 X 5/8, WHIZ, SS	41A839	17
-	8	WASHER, LOCK, 1/2, REG SPLIT, ZN	41A119	18
8	-	WASHER, LOCK, 1/2, REG SPLIT, SS	41A558	18
-	8	NUT, 1/2-20, HEX, ZN	41A200	19
8	-	NUT, 1/2-20, HEX, SS	41A813	19
-	3	WASHER, FLAT, 1/2, STANDARD, ZN	41A043	20
3	-	WASHER, FLAT, 1/2, STANDARD, SS	41A516	20
-	1	END CAP, HEADER CHNL, SWING, IXP DOOR, GALV	13A456F1	21
1	-	END CAP, HEADER CHNL, SWING, IXP DOOR, S/S	13A456F2	21
-	1	END CAP, HEADER CHNL, FIXED, LH, IXP DOOR, GALV	13A455F1	22
1	-	END CAP, HEADER CHNL, FIXED, LH, IXP DOOR, S/S	13A455F2	22
1	1	ELEC BOX ASSY, 90° ELBOW, 1/2"	22A280	23
1	1	STRAIN RELIEF, .375" - .438" DIA.	23A006	24
1	1	CABLE, 18GA., 4 CONDUCTOR, 7 AMP, WIC + 36"	22A283	25

Notes:

1) "86D" panel s ub-assy part numbers vary with HIC of door. Consult factory for specific part numbers required for your door.

2) Item # 4 (13B1406) only required on doors with HIC >= 144" HIC.

Part #'s

HIC <= 96	86D001
HIC >96"< 144"	86D002
HIC > 144"	86D003

When ordering parts, specify Job Number, Door Number and Manufacture Date

REPLACEMENT PARTS

Door Panel Assembly, RH

Part #'s

HIC <= 96"	86D015
HIC >96"< 144"	86D016
HIC > 144"	86D017

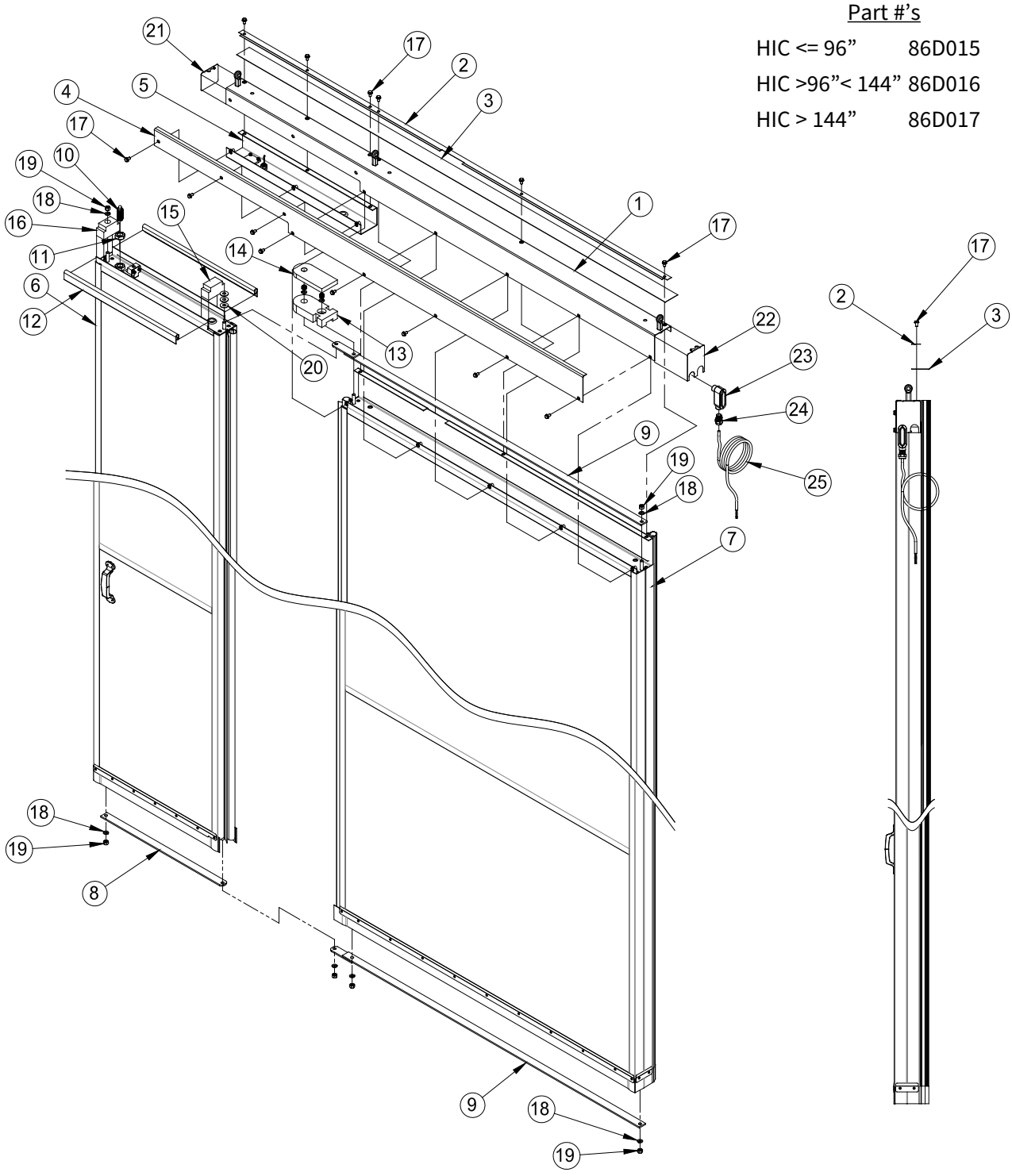

When ordering parts, specify Job Number, Door Number and Manufacture Date

Door Panel Assembly, RH

F2	F1	DESCRIPTION	PART #	ITEM #
-	1	DOOR ASSY, S\SLD, RH, IXP, GV	86DXXXF1	-
1	-	DOOR ASSY, S\SLD, RH, IXP, S/S	86DXXXF2	-
-	1	ASSY, HEADER CHNL, RH, S\SLD, IXP, GV	24B263F1	1
1	-	ASSY, HEADER CHNL, RH, S\SLD, IXP, S/S	24B263F2	1
1	1	RETAINER, GASKET, TOP, IXP, S/SLD, RH	13B1414	2
1	1	GASKET, 3.00", URETHANE, BLACK	15A017	3
-	1	PLATE, DBLR, HDR CHNL, RH, S\SLD, IXP, GV	13B1406F1	4
1	-	PLATE, DBLR, HDR CHNL, RH, S\SLD, IXP, S/S	13B1406F2	4
-	1	ASSY, SWING DOOR CAP, RH, IXP DOOR, GV	24B265F1	5
1	-	ASSY, SWING DOOR CAP, RH, IXP DOOR, S/S	24B265F2	5
-	1	ASM, SWING, H>96, S\SLD, RH, IXP DOOR, GV	86DXXXF1	6
1	-	ASM, SWING, H>96, S\SLD, RH, IXP DOOR, S/S	86DXXXF2	6
-	1	ASM, FIXED, H>144, S\SLD, RH, IXP DOOR, GV	86DXXXF1	7
1	-	ASM, FIXED, H>144, S\SLD, RH, IXP DOOR, S/S	86DXXXF2	7
-	1	PIVOT BAR, SWING PANEL, IXP DOOR, HR	14B179F1	8
1	-	PIVOT BAR, SWING PANEL, IXP DOOR, S/S	14B179F2	8
-	2	WELDMENT, PIVOT BAR, IXP DOOR, HR	28B097F1	9
2	-	WELDMENT, PIVOT BAR, IXP DOOR, S/S	28B097F2	9
1	1	SPRING PLUNGER, 1"-8 UNC	41A797	10
-	1	NUT, 1-8 UNC, JAM, HEX, ZN	41A198	11
1	-	NUT, 1-8 UNC, JAM, HEX, S/S	41A834	11
2	2	BULB SEAL, SWING PANEL, IXP DOOR	15A030	12
1	1	PIVOT BLOCK, RADIUS, SWING, BOTTOM, IXP DOOR	11A080	13
1	1	PIVOT BLOCK, RADIUS, SWING, TOP, IXP DOOR	11A081	14
1	1	SEAL BLOCK, CENTER, SWING, IXP DOOR	11A089	15
1	1	SEAL BLOCK, LEAD EDGE, SWING, IXP DOOR	11A091	16
-	14	SCREW, 3/8-16 X 5/8 WHIZ ZN	41A297	17
14	-	SCREW, 3/8-16 X 5/8 WHIZ S/S	41A839	17
-	8	WASHER, LOCK, 1/2, REG SPLIT, ZN	41A119	18
8	-	WASHER, LOCK, 1/2, REG SPLIT, S/S	41A558	18
-	8	NUT, 1/2-20, HEX, ZN	41A200	19
8	-	NUT, 1/2-20, HEX, S/S	41A813	19
-	3	WASHER, FLAT, 1/2, STANDARD, ZN	41A043	20
3	-	WASHER, FLAT, 1/2, STANDARD, S/S	41A516	20
-	1	END CAP, HEADER CHNL, SWING, IXP DOOR, ZN	13A456F1	21
1	-	END CAP, HEADER CHNL, SWING, IXP DOOR, S/S	13A456F2	21
-	1	END CAP, HEADER CHNL, FIXED, RH, IXP DOOR, ZN	13A457F1	22
1	-	END CAP, HEADER CHNL, FIXED, RH, IXP DOOR, S/S	13A457F2	22
1	1	ELEC BOX ASSY, 90° ELBOW, 1/2"	22A280	23
1	1	STRAIN RELIEF, .375" - .438" DIA.	23A006	24
1	1	CABLE, 18GA., 4 CONDUCTOR, 7 AMP	22A283	25

Notes:

1) "86D" panel sub-assy part numbers vary with HIC of door. Consult factory for specific part numbers required for your door.

2) Item # 4 (13B1406) only required on doors with HIC >= 144" HIC.

Part #'s

HIC <= 96"	86D015
HIC >96"< 144"	86D016
HIC > 144"	86D017

When ordering parts, specify Job Number, Door Number and Manufacture Date

REPLACEMENT PARTS

Door Panel Gaskets

QTY	DESCRIPTION	PART #	ITEM #
1	RETAINER, "T"-STYLE BULB SEAL, HIC + 1.5"	15A124	1
1	BULB SEAL, "T"-STYLE, 3", HIC + 2.75"	15A125	2
1	GASKET, 3.00", URETHANE, BLACK, (WIC*2)-41.50"	15A017	3
1	GASKET, 3.00", URETHANE, BLACK, 66"	15A017	4
1	RTNR, GASKET, FIXED, BOTTOM, FRONT, IXP, S/SLD	13B1425	5
1	RTNR, GASKET, FIXED, BOTTOM, BACK, IXP, S/SLD	13B1431	6
1	RETAINER, GASKET, 30" SWING, BOTTOM, RH, IXP, S/SLD	13B1424	7
1	RETAINER, GASKET, 30" SWING, BOTTOM, LH, IXP, S/SLD	13B1430	8
2	RETAINER, GASKET, END, BOTTOM, IXP DOORS	13B1427	9
1	SEAL, PIVOT BOTTOM, IXP DOOR	15B025	10
35	SCREW, #10-24 x 1.00, PH FHMS, SS	41A199	11
4	SCREW, #10-24 x .50, PH FHMS, SS	41A141	12

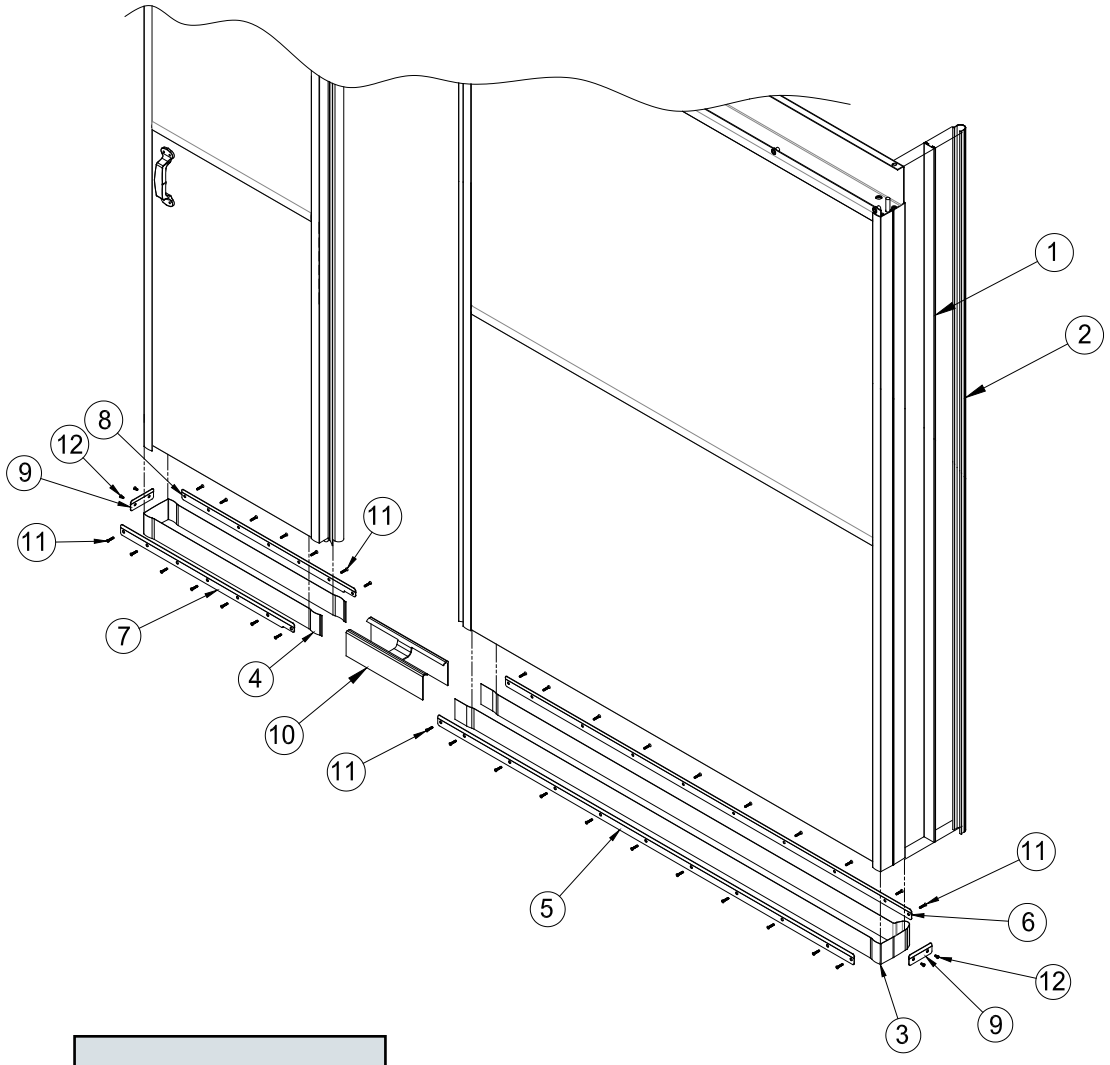

NOTE

Note: Gasket part numbers apply to RH & LH panel assemblies.

Floor Hardware

QTY	DESCRIPTION	PART #	ITEM #
1	ASSY, ROLLER GUIDE, LEAD EDGE, IXP DOOR	24B274	1
2	ANCHOR, MASONRY, 3/8 X 2.25, HH	41A547	2
3	WASHER, FLAT, 3/8, STANDARD, ZN	41A063	2
4	NUT, 3/8-16, HEX, ZN	41A039	2

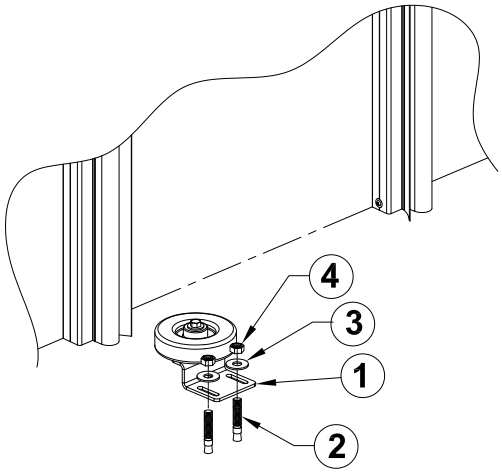

PADLOCK HASP ASSEMBLY

24C042F1, Manual, RH
24C042F2, Manual, LH
24C042F3, Power, RH w/ Cutout Assembly
24C042F4, Power, LH w/ Electric Cutout Assembly

DESCRIPTION	PART #	ITEM #
ASSEMBLY, PADLOCK HASP & SWING ARM, RH	24C041F1	1
ASSEMBLY, PADLOCK HASP & SWING ARM, LH	24C041F2	-
SHROUD	13B110	2
SCREW, #8–32 × 2", SL, PHMS	41A518	3
LABEL, PADLOCK HASP BODY	41A518	4
MOUNTING BLOCK, LIMIT SWITCH	13A076	5
SCREW, #8–32 × 1/2", SL, FHMS	41A519	6
THE FOLLOWING ARE ON POWER OPERATED MODELS ONLY		
CUTOUT SWITCH	23A018	7
CORD GRIP	23A018	8
SCREW, #8–32 × 1", SL, RHMS	41A517	9
GROMMET, #Z–3190	22A037	10

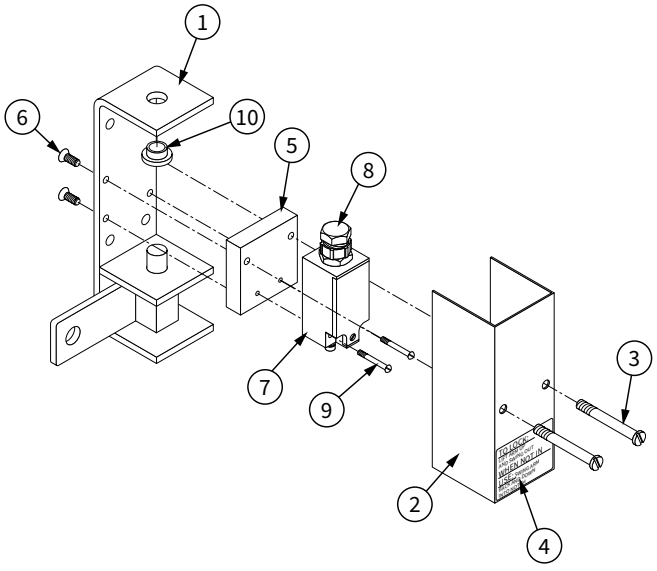

When ordering parts, specify Job Number, Door Number and Manufacture Date

Face Frame Assembly & Gasket

76B001F1, Face-Frame, IXP Door, <=96” HIC
76B001F2, Face-Frame, IXP Door, >96”<=120” HIC
76B001F3, Face-Frame, IXP Door, >120”<=144” HIC
76B001F4, Face-Frame, IXP Door, >144” HIC

QTY	DESCRIPTION	PART #	ITEM #
-	ASSY, FACE FRAME, IXP DOOR	76B001	-
1	EXTRUSION, FACE FRAME, MACHINED, IXP DOOR	14B090	1
2	EXTRUSION, FACE FRAME, CUT, IXP DOOR	14B187	1
3	BULB / BLADE SEAL, FACE FRAME	15B016	1
4	WASHER, FLAT STD, #10, ZN	41A080	AS REQ
5	SCREW, #10 x .75, PH TRSMS, SS	41A232	AS REQ
6	HEAT TAPE (Freezer Only)	22A260	AS REQ

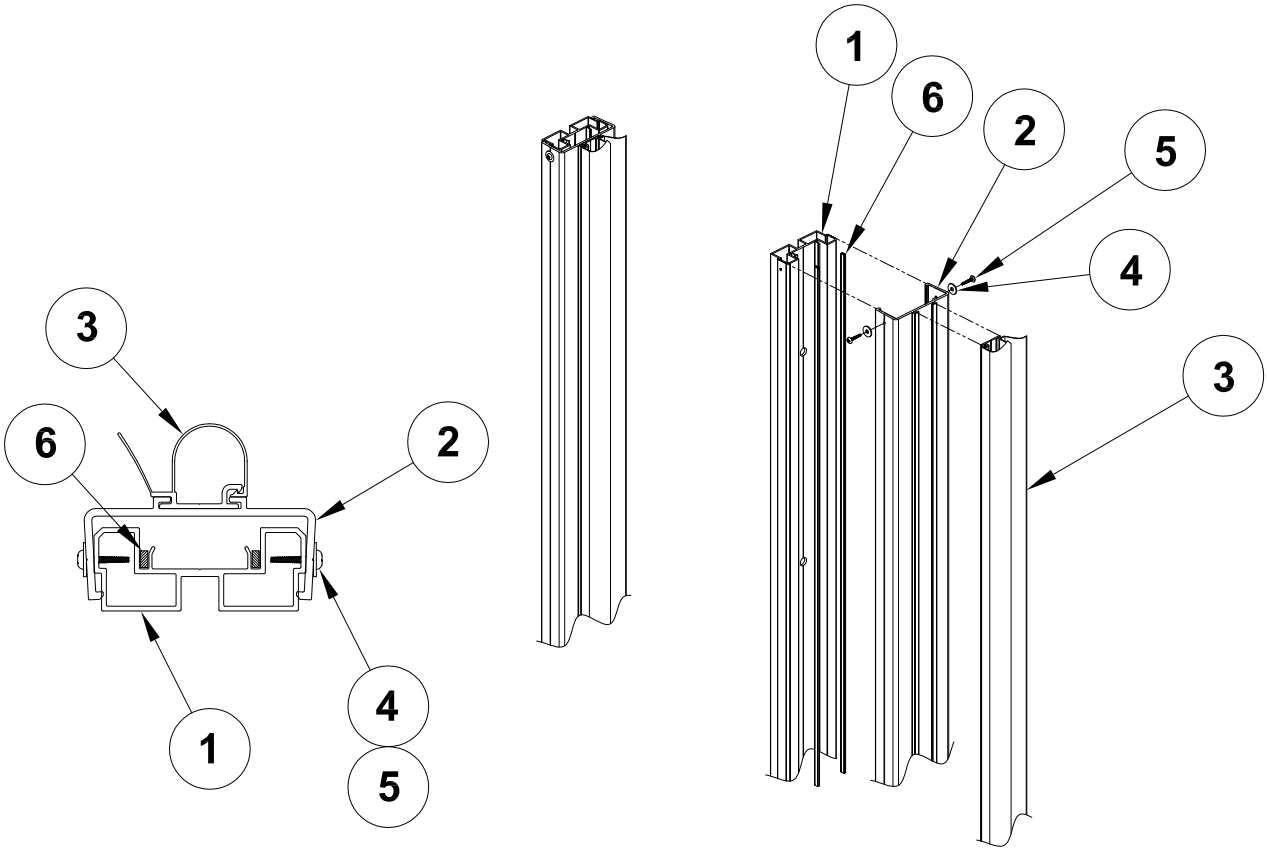

NOTE

Note:Item # 4 & 5 Not provided.

When ordering parts, specify Job Number, Door Number and Manufacture Date

REPLACEMENT PARTS

Wall Track Assemby

F4	F3	F2	F1	DESCRIPTION	PART #	ITEM
-	-	-	1	ASM, WALL TRACK, S/SLD, XP DOORS, GALVANIZED, RH	24B356F1	
-	-	1	-	ASM, WALL TRACK, S/SLD, XP DOORS, STAINLESS, RH	24B356F2	
-	1	-	-	ASM, WALL TRACK, S/SLD, XP DOORS, GALVANIZED, LH	24B356F3	
1	-	-	-	ASM, WALL TRACK, S/SLD, XP DOORS, STAINLESS, LH	24B356F4	
-	-	-	1	WLDMT, WALL TRACK S/SLD, XP DOORS, RH, GALV	28B251F1	
-	-	1	-	WLDMT, WALL TRACK S/SLD, XP DOORS, RH, S/S	28B251F2	
-	1	-	-	WLDMT, WALL TRACK S/SLD, XP DOORS, LH, GALV	28B251F3	
1	-	-	-	WLDMT, WALL TRACK S/SLD, XP DOORS, LH, S/S	28B251F4	
1	1	1	1	*BRACKET, DOOR RETURN, S/S	13B911	
-	1	-	1	BRKT, XP WALL TRACK, DOOR MOUNT, ZN	13B1399F1	
1	-	1	-	BRKT, XP WALL TRACK, DOOR MOUNT, SS	13B1399F2	
-	-	1	1	* ASSY, DETENT BRACKET W/GUIDE BLOCK, RH	24B170F1	
1	1	-	-	* ASSY, DETENT BRACKET W/GUIDE BLOCK, LH	24B170F2	
4	4	4	4	INSERT, HEX, 3/8-16, GRIP RANGE .027-.150	41A788	
2	2	2	2	*SCREW, 3/8 X 1.00 HEX HEAD, WHIZLOCK, SS	41A793	
2	2	2	2	*BOL T,5/16-18 X .75 CARRIAGE, SS	41A344	
2	2	2	2	*NU T,5/16 WHIZLOCK, SS	41A712	
-	4	-	4	SCREW, 1/4-20 x .750, SL PHMS, ZN	41A489	
4	-	4	-	SCREW, 1/4-20 x 1.00, PH PHMS, S/S	41A250	
1	1	1	1	SHIM, XP WALL TRACK, DOOR MOUNT	11A175-A	

NOTE

Note: * Indicated items are shipped in loose parts box.

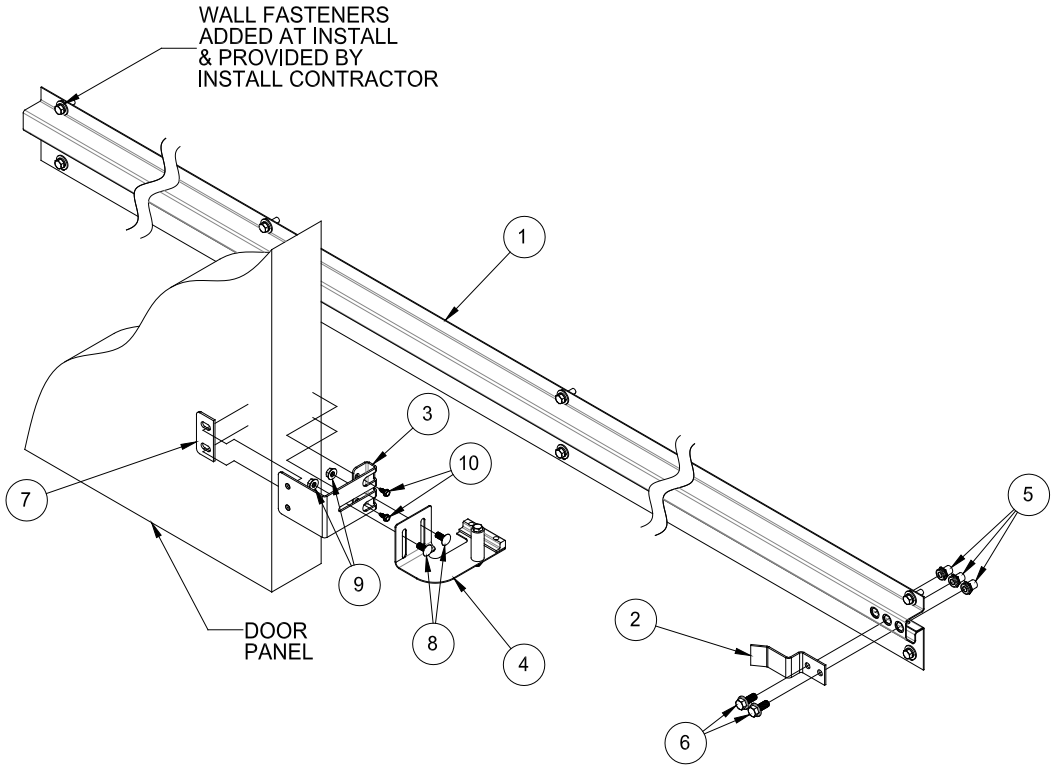

REPLACEMENT PARTS

Miscellaneous Options

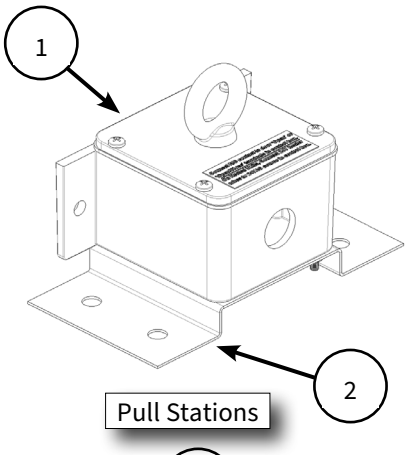

Pull Stations

Pull Station Options

DESCRIPTION	PART #	ITEM #
ASM, PULL SWITCH, CEILING, UNHEATED	24B102F1	1
ASM, PULL SWITCH, CEILING, HEATED	24B102F2	-

Push Button Options

DESCRIPTION	PART #	ITEM #
PUSH BUTTON STATION, UN-HEATED	24B029F1	1
PUSH BUTTON STATION, HEATED	24B029F2	2

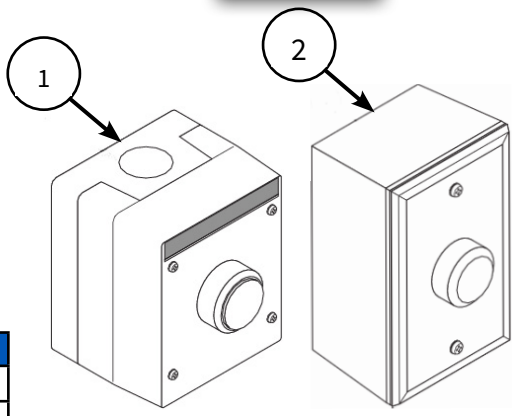

Push Buttons

Motion Detector Options

DESCRIPTION	PART #	ITEM #
AUTO MICROWAVE DETECTOR	23A158	-
BRACKET	13B335	-
INSTALLATION GUIDE	17C177	-

Radio Control System Options

DESCRIPTION	PART #	ITEM #
TRANSMITTER, RADIO CONTROL	23A183	-
RECEIVER, RADIO CONTROL	23A184	-

When ordering parts, specify Job Number, Door Number and Manufacture Date

Loop Detector Options

DESCRIPTION	PART #	ITEM #
LOOP DETECTOR, 24 VAC 416A-7	23A019	-
WIRE, 14 GA., BLACK, 7 STRAND #XHHW	22A085	-
EMBEDDING SEALER	23A160	-
LOOP DETECTOR INSTALLATION GUIDE	17C174	-

Photoeye Options

DESCRIPTION	PART #	ITEM #
PHOTOEYE, “915” BANNER TRANSMITTER	22B020	-
REFLECTOR, AMBER, 2" × 4" OVAL	22A078	-
PHOTOEYE, EMITTER, BANNER	22B006	-
PANTRON PHOTOEYE RECEIVER W/5 METER CABLE	23B046	-
MOUNTING BRACKET, PHOTOEYE	22B023	-
PANTRON PHOTOEYE AMPLIFIER	23A226	
INSTALLATION GUIDE	17C175	-
PANTRON PHOTOEYE RECEIVER W/15 METER CABLE	23B046-2	
PANTRON PHOTOEYE TRANSMITTER W/35 METER CABLE	23B047-1	
PANTRON PHOTOEYE TRANSMITTER W/35 METER CABLE	23B047-2	

Control Panel

Part # 18D271 - 208/230V
18D272 - 460V

When ordering parts, specify Job Number, Door Number and Manufacture Date

DESCRIPTION	PART #	ITEM #
DRIVE, VARIABLE FREQUENCY, 230V	23B102	1
DRIVE, VARIABLE FREQUENCY, 460V	23B103	1
BRAKE RESISTOR, 230V	23B104	2
BRAKE RESISTOR, 460V	23B105	2
CONTROLLER, W/DISPLAY (NOT SHOWN)	23B101	3
TRANSFORMER, 100VA	23B107	4
CONTACTOR, 3-PHASE	23B108	5
POWER SUPPLY, 24VDC	23B109	6
OVERLOAD, THERMAL	23B110	7
CABLE, MOD-BUS (NOT SHOWN)	22A279	8

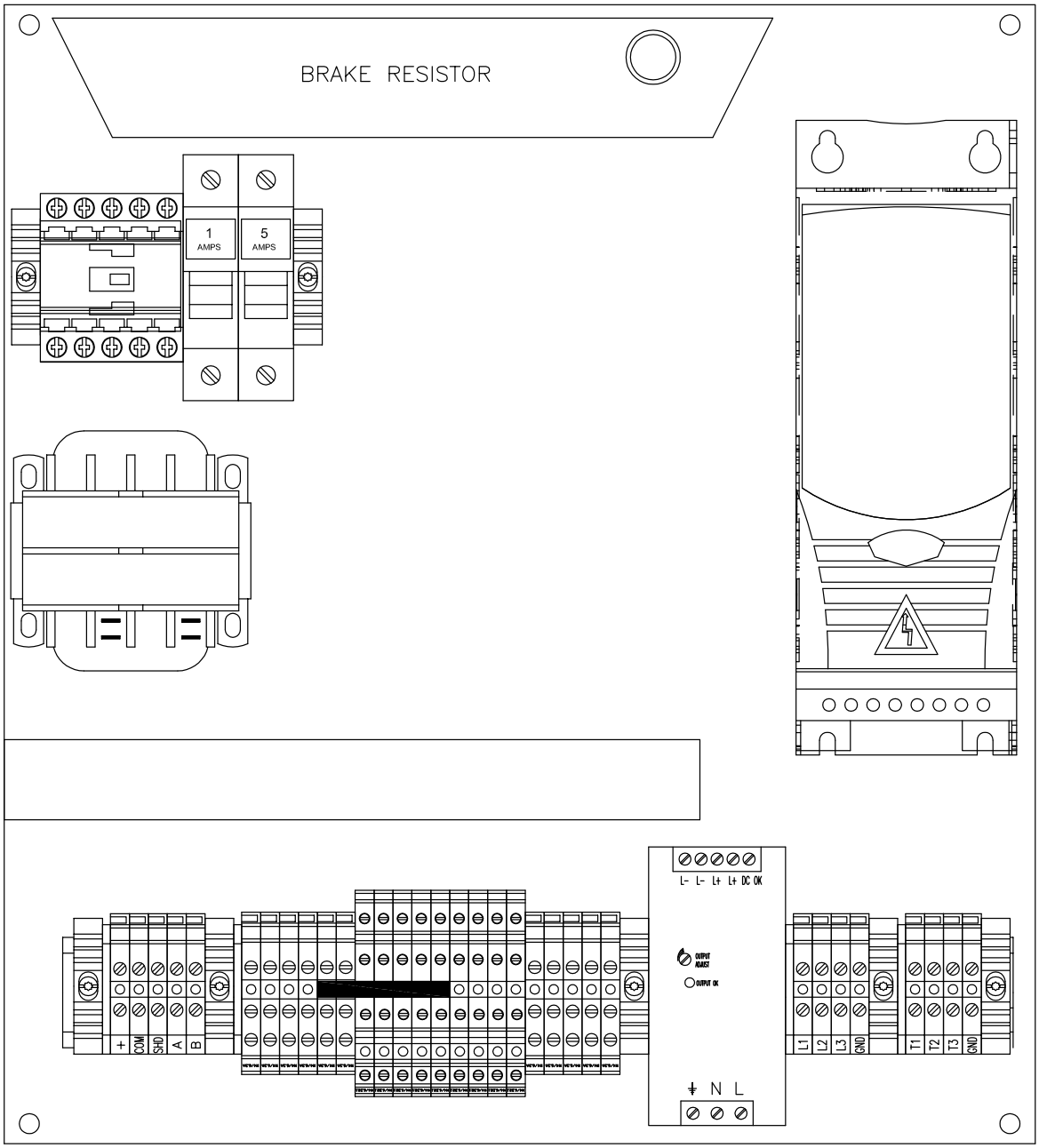

REPLACEMENT PARTS

OPEN UP TO WHAT'S POSSIBLE

CLEANSEAL
AN ASI DOORS BRAND

ENVIRO
AN ASI DOORS BRAND

MARATHON

asidoors.com

ASI DOORS, INC. 5848 North 95th Court, Milwaukee, WI 53225 (800) 558-7068