Field Wiring

1. Motor cable to be VFD rated & shielded as supplied
2. Motor shield and ground wire to be connected to ground lug
3. Encoder cable to be shielded as supplied
4. All wiring to comply with NFPA 70, National Electric Code
5. Terminal block torque ratings
   - Main: 7.0 lb-in
   - IO: 4.4 lb-in
6. All DC wiring should be shielded and in separate conduit
7. Any item fastened to enclosure must be rated Nema 4X to maintain Type 4X rating.

Electrical Specification

1. All power & control wiring to be 600 volt rated, stranded copper, Type MTW
2. Power wiring to be black, minimum 14 AWG
3. AC control to be red or white, 16 AWG
4. DC control to be blue, 16 AWG
5. Low voltage wiring to be shielded, 20 AWG
6. Enclosure to be Nema Type 4X, unless otherwise indicated under options
7. Control panel shall be UL 508 listed

PAGE#	DESCRIPTION
1	COVER PAGE
2	POWER SCHEMATIC
3	INPUT/OUTPUT PHOTO-EYES
4	INPUT/OUTPUT LIGHT CURTAIN
5	PANEL LAYOUT-BOM

SERVICE VOLTAGE

X	230V, 3PH, 50/60HZ

OUTPUT VOLTAGE

X	230V, 3PH, 0-200HZ

MOTOR DATA

	VOLT	HP	FLA	RECOMMENDED FUSE
X	230	3	11.5	20 AMPS

REV	CHG#	DATE	BY	REVISION
B	3216	6-6-19	DEN	UPDATED PE & LC WIRING DETAIL ADDED ACTIVATION WIRING INFO
A	2961	1-17-19	DEN	INTITAL RELEASE

ASI DOORS, INC.
5848 NORTH 95th COURT MILWAUKEE, WISCONSIN 53225

TITLE 230VAC, DGII Controller, 180VDC Brake

TOLERANCES UNLESS OTHERWISE NOTED
X.X ±.06 X.XX ±.03 X.XXX ±.010
DIA./RADIUS ±.005 ANGLES ±1°

ASI DOORS, INC. RESERVES PROPRIETARY RIGHTS TO THIS DRAWING AND THE DATA SHOWN THEREON. SAID DRAWING AND/OR DATA ARE CONFIDENTIAL AND ARE NOT TO BE USED OR REPRODUCED FOR ANY PURPOSE WITHOUT WRITTEN CONSENT OF ASI DOORS, INC.

DWN BY	ECR #	DATE	EXP.NO.	DRAWING NO.	REV #
DEN	2961	1-17-19	96-125-0000	18D0309	B

NEXT ASM. SCALE NTS

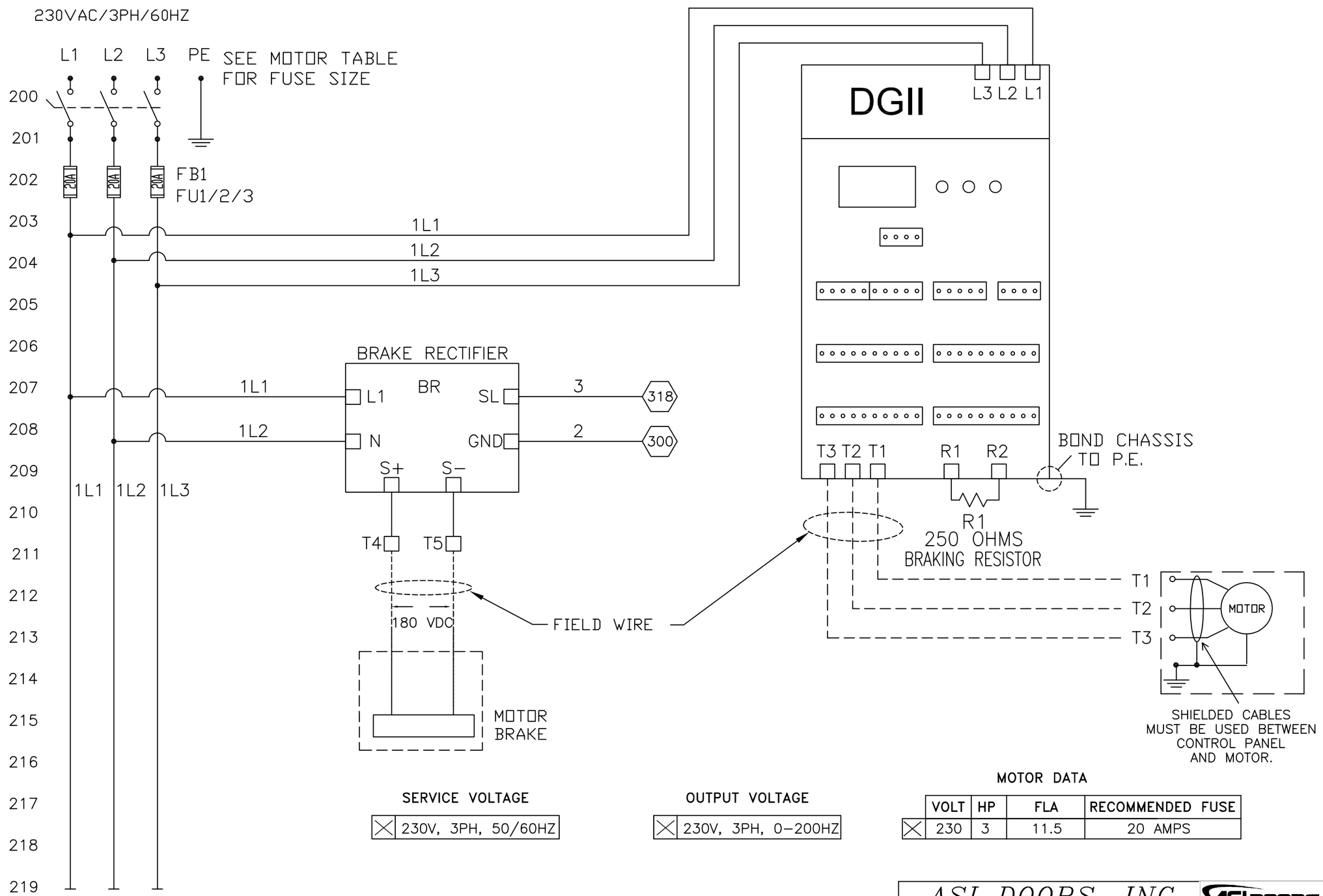

SERVICE VOLTAGE

X	230V, 3PH, 50/60HZ

OUTPUT VOLTAGE

X	230V, 3PH, 0–200HZ

MOTOR DATA

	VOLT	HP	FLA	RECOMMENDED FUSE
X	230	3	11.5	20 AMPS

SHEET 2 OF 5

REV	CHG#	DATE	BY	REVISION
B	3216	6–6–19	DEN	UPDATED PE & LC WIRING DETAIL ADDED ACTIVATION WIRING INFO
A	2961	1–17–19	DEN	INTITAL RELEASE

ASI DOORS, INC.

5848 NORTH 95th COURT MILWAUKEE, WISCONSIN 53225

TITLE 230VAC, DGII Controller, 180VDC Brake

TOLERANCES UNLESS OTHERWISE NOTED
X.X ±.06 X.XX ±.03 X.XXX ±.010
DIA./RADIUS ±.005 ANGLES ±1°

ASI DOORS, INC. RESERVES PROPRIETARY RIGHTS TO THIS DRAWING AND THE DATA SHOWN THEREON. SAID DRAWING AND/OR DATA ARE CONFIDENTIAL AND ARE NOT TO BE USED OR REPRODUCED FOR ANY PURPOSE WITHOUT WRITTEN CONSENT OF ASI DOORS, INC.

DWN BY	ECR #	DATE	EXP.NO.	DRAWING NO.	REV #
DEN	2961	1–17–19	96–125–0000	18D0309	B

NEXT ASM. SCALE NTS

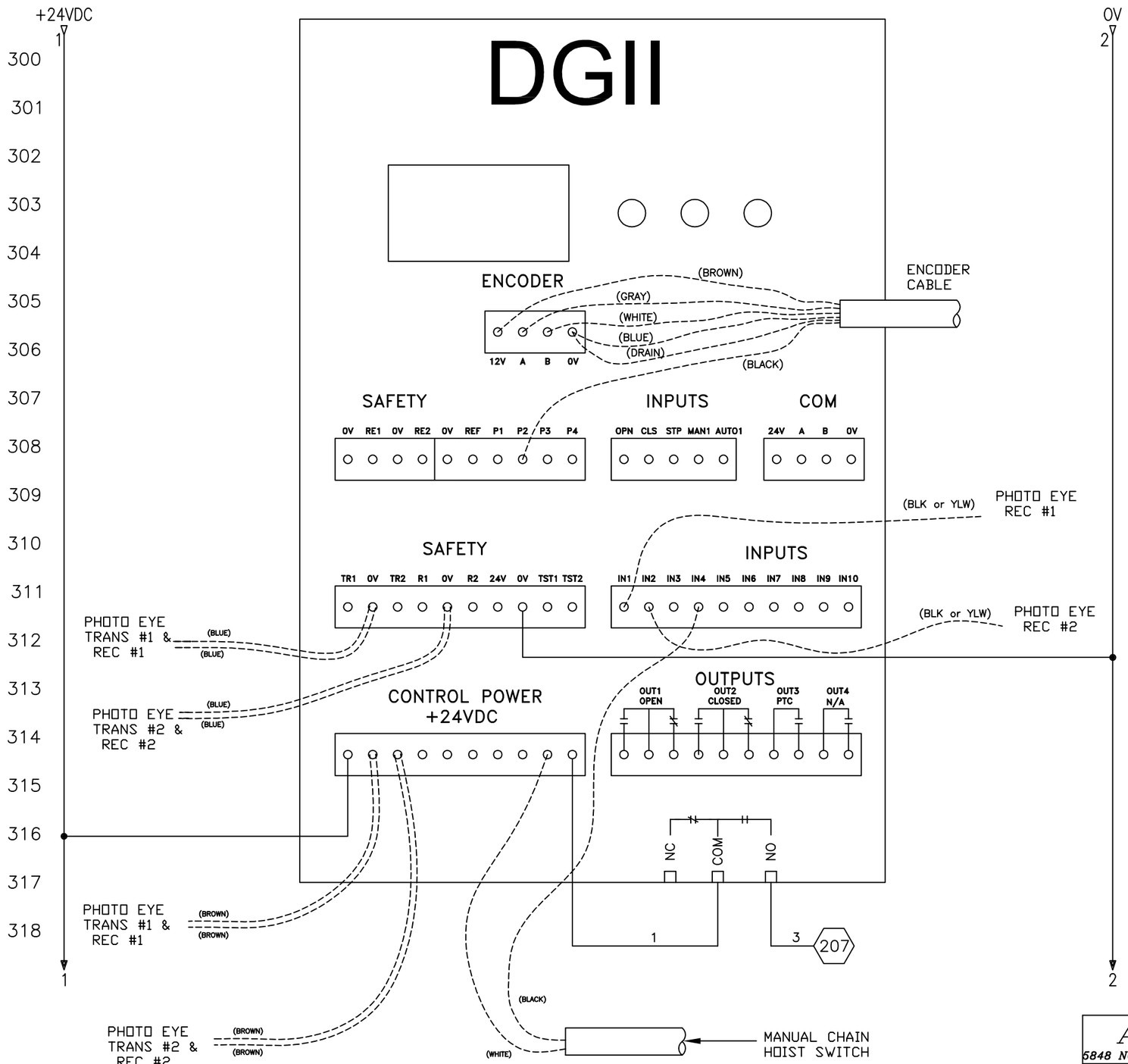

AUTOMATIC ACTIVATION DEVICES

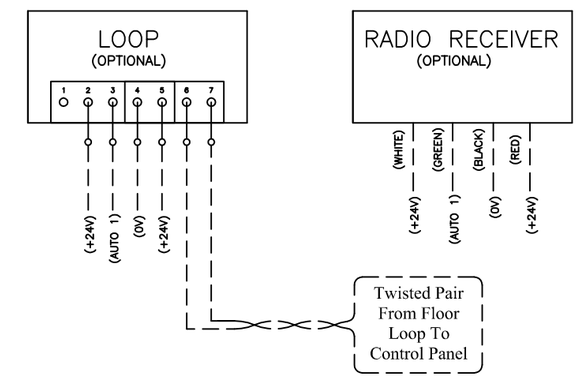

DUAL PHOTO-EYE

(NOTE: WHEN MORE THAN 1-SET ALTERNATE SIDES)

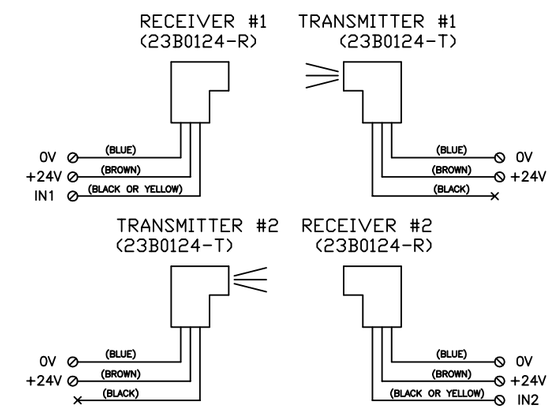

USE THIS REFERENCE PAGE FOR UNITS USING DUAL PHOTO-EYE OPTION

TYPICAL ACTIVATION

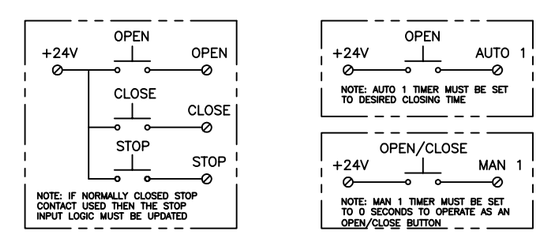

SHEET 3 OF 5

FACTORY WIRED
FIELD WIRED

REV	CHG#	DATE	BY	REVISION
B	3216	6-6-19	DEN	UPDATED PE & LC WIRING DETAIL ADDED ACTIVATION WIRING INFO
A	2961	1-17-19	DEN	INTITAL RELEASE

ASI DOORS, INC.
5848 NORTH 95th COURT MILWAUKEE, WISCONSIN 53225

TITLE 230VAC, DGII Controller, 180VDC Brake

TOLERANCES UNLESS OTHERWISE NOTED
X.X ±.06 X.XX ±.03 X.XXX ±.010
DIA./RADIUS ±.005 ANGLES ±1°

ASI DOORS, INC. RESERVES PROPRIETARY RIGHTS TO THIS DRAWING AND THE DATA SHOWN THEREON. SAID DRAWING AND/OR DATA ARE CONFIDENTIAL AND ARE NOT TO BE USED OR REPRODUCED FOR ANY PURPOSE WITHOUT WRITTEN CONSENT OF ASI DOORS, INC.

DWN BY	ECR #	DATE	EXP.NO.	DRAWING NO.	REV #
DEN	2961	1-17-19	96-125-0000	18D0309	B
NEXT ASM.		SCALE NTS			

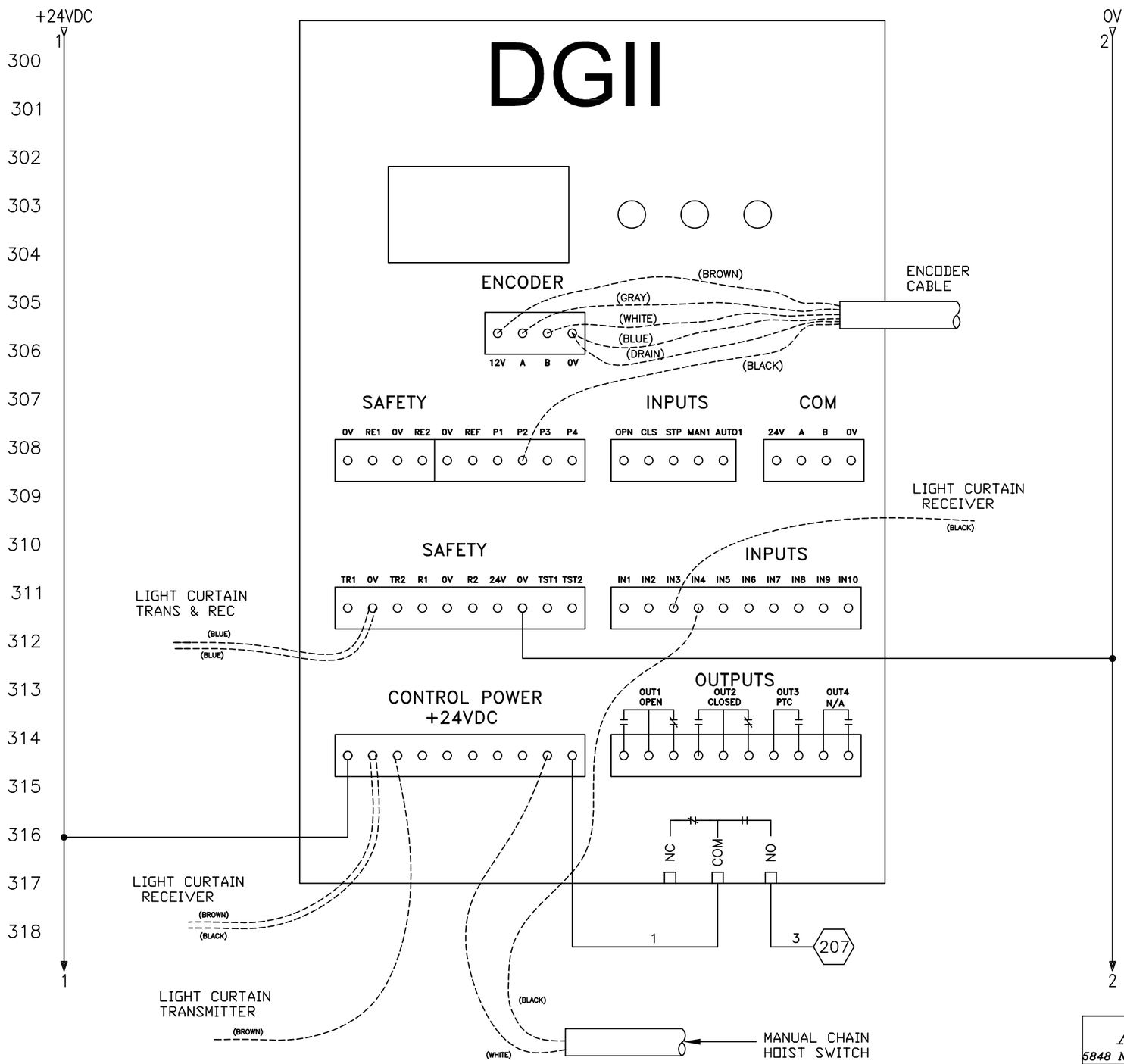

SHEET 4 OF 5

——— FACTORY WIRED
- - - - - - FIELD WIRED

REV	CHG#	DATE	BY	REVISION
B	3216	6-6-19	DEN	UPDATED PE & LC WIRING DETAIL ADDED ACTIVATION WIRING INFO
A	2961	1-17-19	DEN	INTITAL RELEASE

ASI DOORS, INC.
5848 NORTH 95th COURT MILWAUKEE, WISCONSIN 53225

TITLE 230VAC, DGII Controller, 180VDC Brake

TOLERANCES UNLESS OTHERWISE NOTED
X.X ±.06 X.XX ±.03 X.XXX ±.010
DIA./RADIUS ±.005 ANGLES ±1°

ASI DOORS, INC. RESERVES PROPRIETARY RIGHTS TO THIS DRAWING AND THE DATA SHOWN THEREON. SAID DRAWING AND/OR DATA ARE CONFIDENTIAL AND ARE NOT TO BE USED OR REPRODUCED FOR ANY PURPOSE WITHOUT WRITTEN CONSENT OF ASI DOORS, INC.

DWN BY	ECR #	DATE	EXP.NO.	DRAWING NO.	REV #
DEN	2961	1-17-19	96-125-0000	18D0309	B
NEXT ASM.		SCALE NTS			

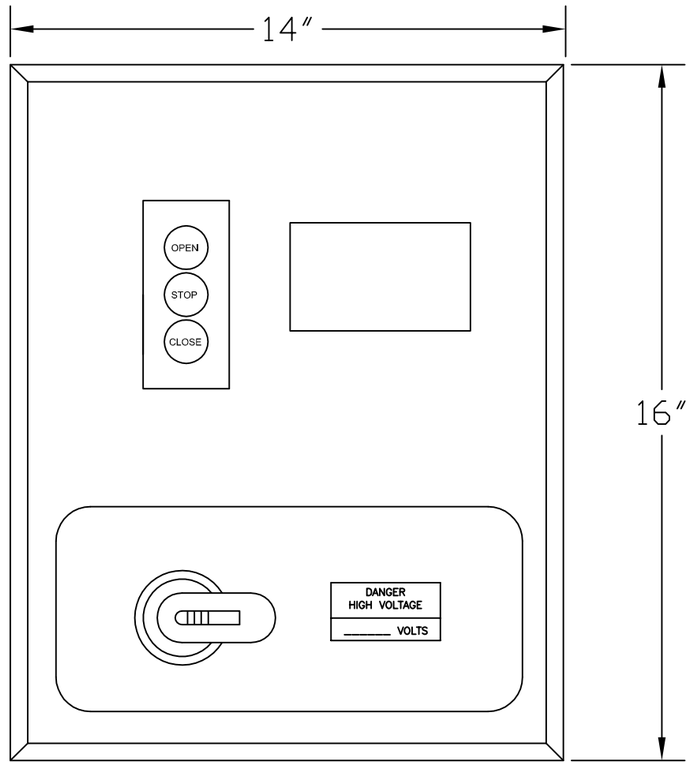

Bill of Materials - 18D0309 - 3.3 Hp/230 Volt			
Item	**Qty**	**Part Number**	**Description**
Encl	1	CA7981	Enclosure, 16" X 14" X 8". Nema Type 4X
Pnl	1	23-118-0002	Sub-panel for above, Painted
Pnl	1	23-118-0001	Sub-panel for above, Steel
VDB	1	CA7981 AVBK7	Variable depth brackets -set of 4
DGII	1	95-125-2330	Digital Gateway II controller, 230V 3HP
MEM	1	30-111-0002	Membrane switch, open/stop/close
	1	70-111-0000	Membrane cable, 32"
DS1	1	OT40F3U	Disconnect, non-fusible, 600 volt, 40 amp
	1	OXP6X210	Disconnect shaft
	1	OHB45L6	Disconnect Handle
RS1	1	81-118-0000	Resistor, 250 ohm, 500 watt
BR	1	50003	Rectifier, module
FB1	1	LPSC003	Fuseholder, 600V, 3 pole, Class CC
FU1/2/3	1 ea	CCMR 20	Fuse, 600 volt, 20 amp, Class CC or equivalent
PE	1	LAMA2-14-QY	Lug, ground
TB	2	1492-J4-B	Terminal block, 35 amp, blue
	1	1492-JG4	Terminal block, ground, green
	3	1492-EAJ35	End anchor

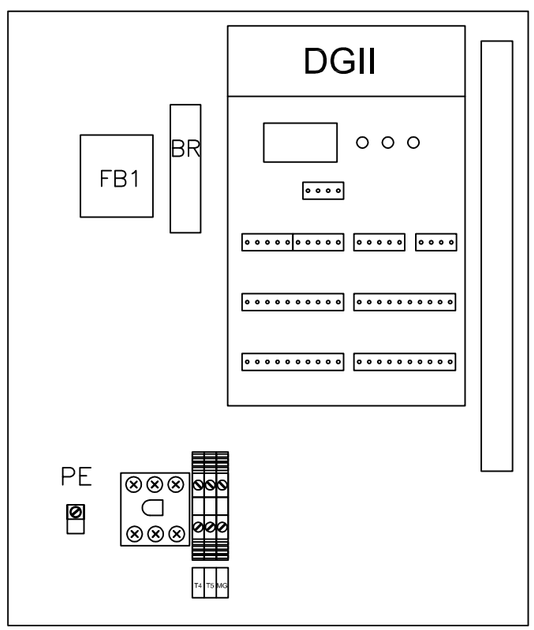

SERVICE VOLTAGE

X	230V, 3PH, 50/60HZ

OUTPUT VOLTAGE

X	230V, 3PH, 0–200HZ

	VOLT	HP	FLA	RECOMMENDED FUSE
X	230	3.3	10.3	20 AMPS

SHEET 5 OF 5

REV	CHG#	DATE	BY	REVISION
B	3216	6–6–19	DEN	UPDATED PE & LC WIRING DETAIL ADDED ACTIVATION WIRING INFO
A	2961	1–17–19	DEN	INTITAL RELEASE

ASI DOORS, INC.
5848 NORTH 95th COURT MILWAUKEE,WISCONSIN 53225

TITLE 230VAC DGII Controller, 180VDC Brake

TOLERANCES UNLESS OTHERWISE NOTED
X.X ±.06 X.XX ±.03 X.XXX ±.010
DIA./RADIUS ±.005 ANGLES ±1°

ASI DOORS, INC. RESERVES PROPRIETARY RIGHTS TO THIS DRAWING AND THE DATA SHOWN THEREON. SAID DRAWING AND/OR DATA ARE CONFIDENTIAL AND ARE NOT TO BE USED OR REPRODUCED FOR ANY PURPOSE WITHOUT WRITTEN CONSENT OF ASI DOORS, INC.

DWN BY	ECR #	DATE	EXP.NO.	DRAWING NO.	REV #
DEN	2961	1–17–19	96–125–0000	18D0309	B
NEXT ASM.		SCALE NTS			