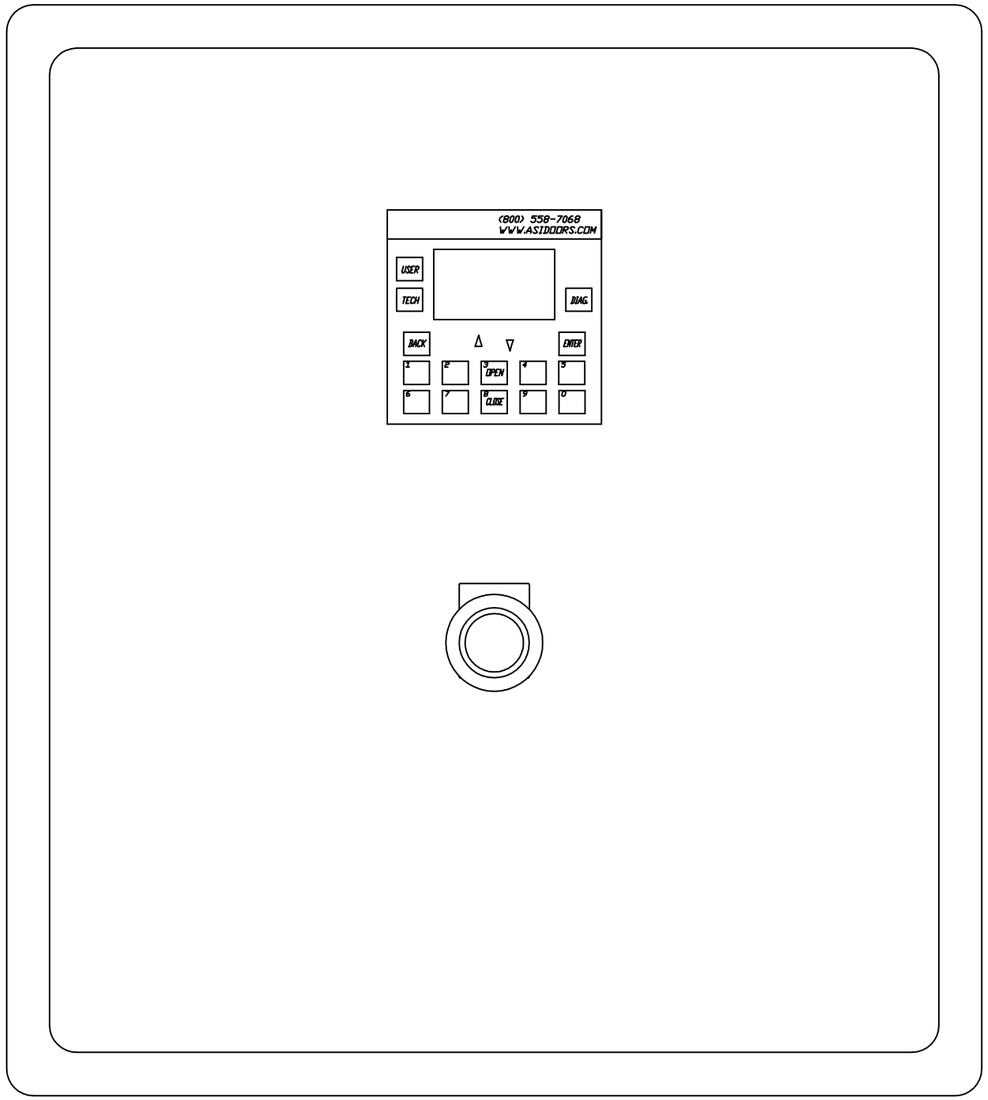

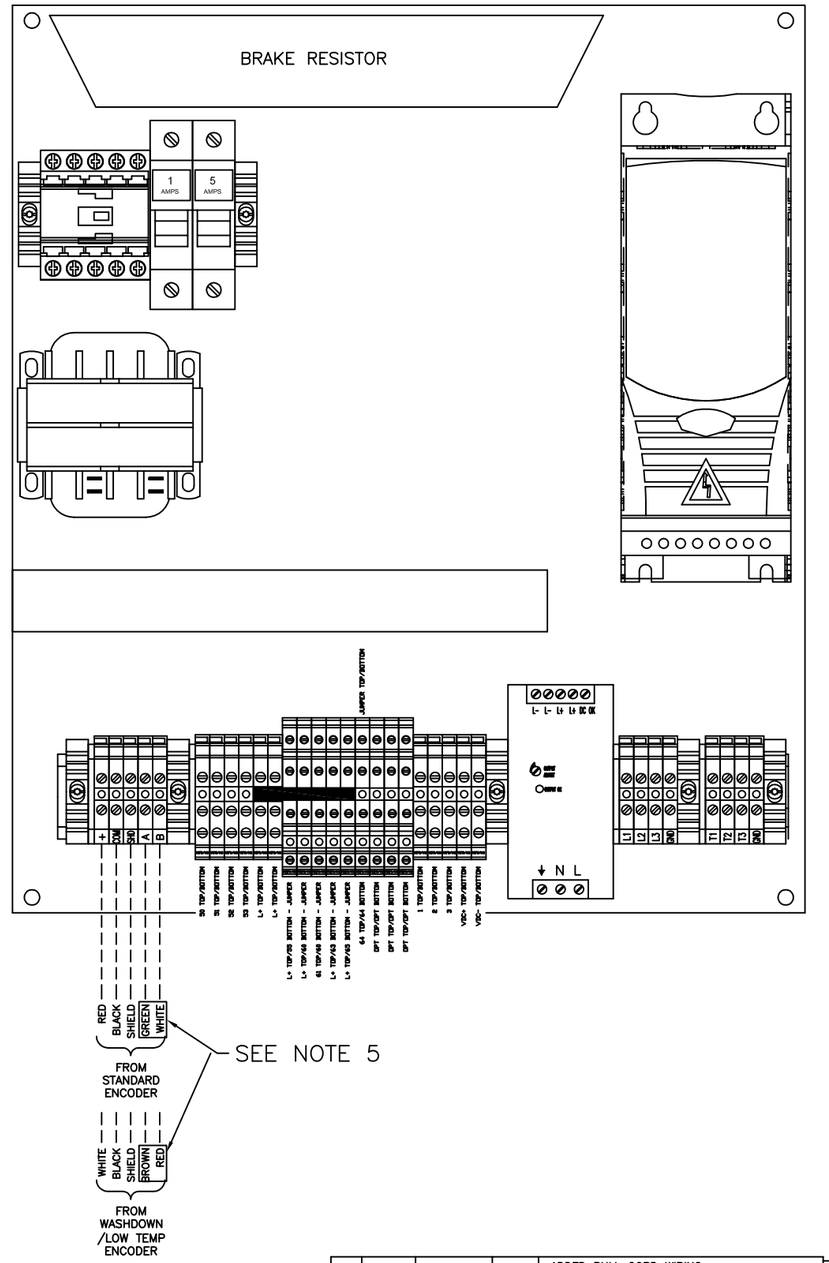

OPTIONS

QTY	DESCRIPTION	PART NO	
1	WIRING DIAGRAM, 208/230V	18D271	1
1	PROGRAMMABLE LOGIC CONTROLLER	23B101	2
1	VARIABLE FREQUENCY DRIVE, 1 HP, 200–240V	23B102	3
1	BRAKE RESISTOR, 230V	23B104	4
1	CABLE, MOD–BUS	22A279	5
1	TRANSFORMER, 24–120 SECONDARY, 100VA	23B107	6
1	POWER SUPPLY, 24DC	23B109	7
1	CONTACTOR, 3–PHASE	23B108	8
1	OVERLOAD, THERMAL	23B110	9

SHEET 1 OF 2

PART TO BE CLEAN, DEBURRED, AND FREE OF SHARP EDGES

REV	CHG#	DATE	BY	REVISION
G	2914	12/04/13	SES	ADDED BANNER P.E.
F	2891	08/02/13	KWG	ADDED LOW/HIGH VOLTAGE NOTE (SHT 2)
E	2728	8–20–10	JME	ADDED PULL CORD WIRING ADDED LOW TEMP/WASHDOWN ENCODER WIRING
D	2709	2–12–09	JME	REVISED FUSE WIRING
C	2693	7–15–09	JME	REVISED MOTION DETECTOR WIRING REVISED BREAKAWAY WIRING REVISED TERMINAL BLOCK ARRANGEMENT
B		9–26–08	JME	REVISED PHOTOEYE WIRING
A		5–28–08	JME	UPDATED WITH OPTIONS

ASI DOORS, INC.
5848 NORTH 95th COURT MILWAUKEE, WISCONSIN 53225

TITLE ASSEMBLY, CONTROL PANEL, XP DOOR 208–230V

TOLERANCES UNLESS OTHERWISE NOTED
X.X ±.06 X.XX ±.03 X.XXX ±.010
DIA./RADIUS ±.005 ANGLES ±1°

ASI DOORS, INC. RESERVES PROPRIETARY RIGHTS TO THIS DRAWING AND THE DATA SHOWN THEREON. SAID DRAWING AND/OR DATA ARE CONFIDENTIAL AND ARE NOT TO BE USED OR REPRODUCED FOR ANY PURPOSE WITHOUT WRITTEN CONSENT OF ASI DOORS, INC.

DWN BY	ECR #	DATE	EXP.NO.	DRAWING NO.	REV NO.
JME		6–27–07		18D271	G
NEXT ASM.		SCALE 1=1			

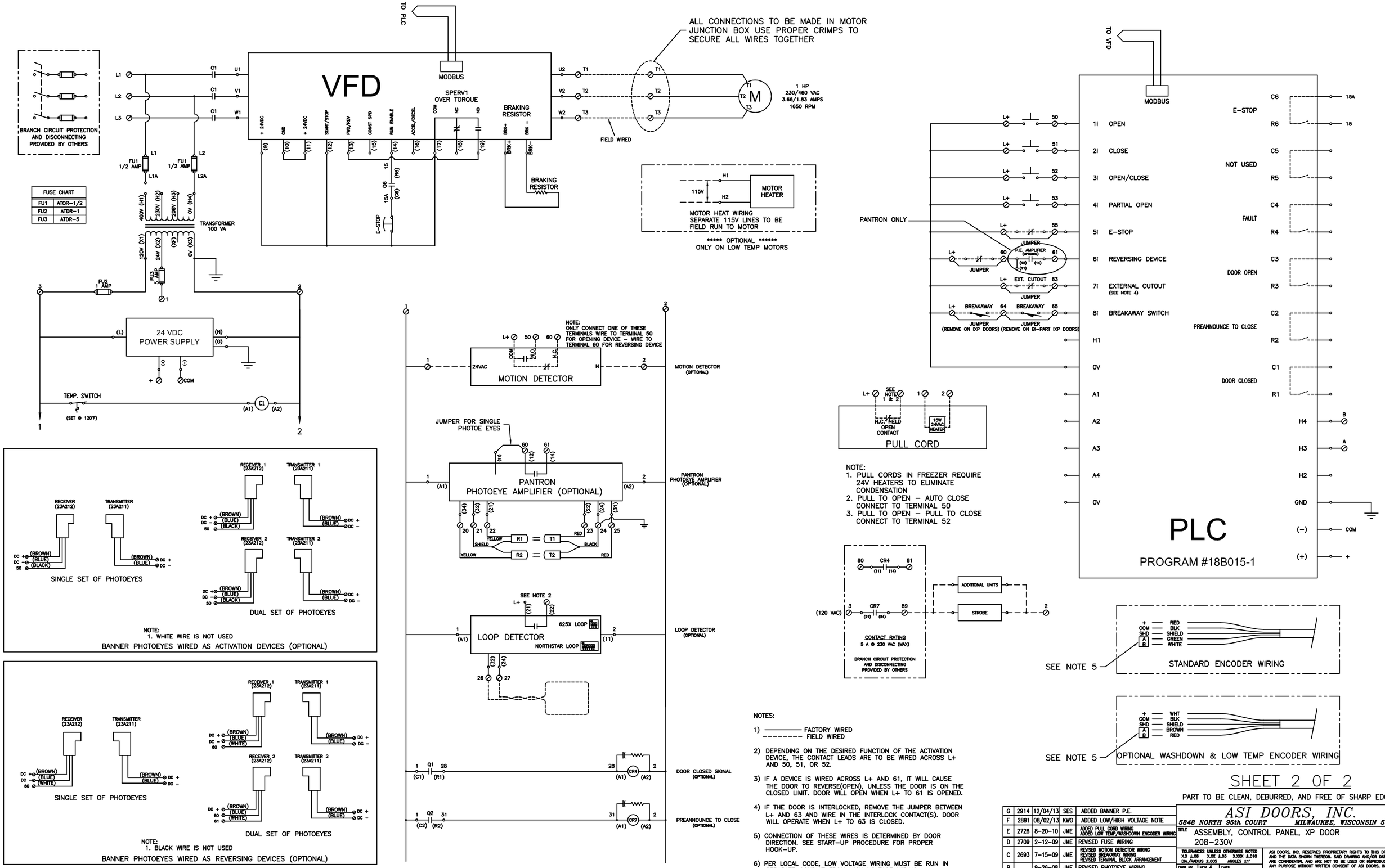

NOTE:
1. WHITE WIRE IS NOT USED

NOTE:
1. WHITE WIRE IS NOT USED

NOTES:

1) ———— FACTORY WIRED
- - - - - - FIELD WIRED

2) DEPENDING ON THE DESIRED FUNCTION OF THE ACTIVATION DEVICE, THE CONTACT LEADS ARE TO BE WIRED ACROSS L+ AND 50, 51, OR 52.

3) IF A DEVICE IS WIRED ACROSS L+ AND 61, IT WILL CAUSE THE DOOR TO REVERSE(OPEN), UNLESS THE DOOR IS ON THE CLOSED LIMIT. DOOR WILL OPEN WHEN L+ TO 61 IS OPENED.

4) IF THE DOOR IS INTERLOCKED, REMOVE THE JUMPER BETWEEN L+ AND 63 AND WIRE IN THE INTERLOCK CONTACT(S). DOOR WILL OPERATE WHEN L+ TO 63 IS CLOSED.

5) CONNECTION OF THESE WIRES IS DETERMINED BY DOOR DIRECTION. SEE START-UP PROCEDURE FOR PROPER HOOK-UP.

6) PER LOCAL CODE, LOW VOLTAGE WIRING MUST BE RUN IN SEPARATE CONDUIT FROM HIGH VOLTAGE WIRING.

SHEET 2 OF 2

PART TO BE CLEAN, DEBURRED, AND FREE OF SHARP EDGES

REV	CHG#	DATE	BY	REVISION
G	2914	12/04/13	SES	ADDED BANNER P.E.
F	2891	08/02/13	KWG	ADDED LOW/HIGH VOLTAGE NOTE
E	2728	8-20-10	JME	ADDED PULL CORD WIRING ADDED LOW TEMP/WASHDOWN ENCODER WIRING
D	2709	2-12-09	JME	REVISED FUSE WIRING
C	2693	7-15-09	JME	REVISED MOTION DETECTOR WIRING REVISED BREAKAWAY WIRING REVISED TERMINAL BLOCK ARRANGEMENT
B		9-26-08	JME	REVISED PHOTOEYE WIRING
A		5-28-08	JME	UPDATED WITH OPTIONS

ASI DOORS, INC.
5848 NORTH 95th COURT MILWAUKEE, WISCONSIN 53225

TITLE ASSEMBLY, CONTROL PANEL, XP DOOR 208-230V

TOLERANCES UNLESS OTHERWISE NOTED X.X ±.06 X.XX ±.03 X.XXX ±.010 DIA./RADIUS ±.005 ANGLES ±1°

DWN BY JME | ECR # | DATE 6-27-07
NEXT ASM. | SCALE 1=1 | EXP.NO.

ASI DOORS, INC. RESERVES PROPRIETARY RIGHTS TO THIS DRAWING AND THE DATA SHOWN THEREON. SAID DRAWING AND/OR DATA ARE CONFIDENTIAL AND ARE NOT TO BE USED OR REPRODUCED FOR ANY PURPOSE WITHOUT WRITTEN CONSENT OF ASI DOORS, INC.

DRAWING NO. 18D271 REV NO. G